182.72.104.6612Pendelkugellager

# Self-aligning ball bearings 1202-TVH (Series 12)

## main dimensions to DIN 630

The datasheet is only an overview of dimensions and basic load ratings of the selected product. Please always observe all the guidelines in these overview pages. Further information is given on many products under the menu item "Description". You can also order comprehensive information via the Catalogue selection system (https://www.schaeffler.de/content.schaeffler.de/en/news_media/index.jsp) or by telephone on +49 (91 32) 82 - 28 97.

| | | | |
|---|---|---|---|
| d | 15 | mm | |
| D | 35 | mm | |
| B | 11 | mm | |
| $D_1$ | 28,8 | mm | |
| $d_1$ | 20,2 | mm | |
| $D_{a\ max}$ | 30,8 | mm | |
| $d_{a\ min}$ | 19,2 | mm | |
| $r_{a\ max}$ | 0,6 | mm | |
| $r_{min}$ | 0,6 | mm | |
| m | 0,048 | kg | Mass |
| $C_r$ | 7700 | N | Basic dynamic load rating, radial |
| $C_{0r}$ | 1730 | N | Basic static load rating, radial |
| e | 0,34 | | |
| $Y_1$ | 1,86 | | |
| $Y_2$ | 2,88 | | |
| $Y_0$ | 1,95 | | |
| $n_G$ | 23800 | 1/min | Limiting speed |
| $n_B$ | 19100 | 1/min | Reference speed |
| $C_{ur}$ | 108 | N | Fatigue limit load, radial |

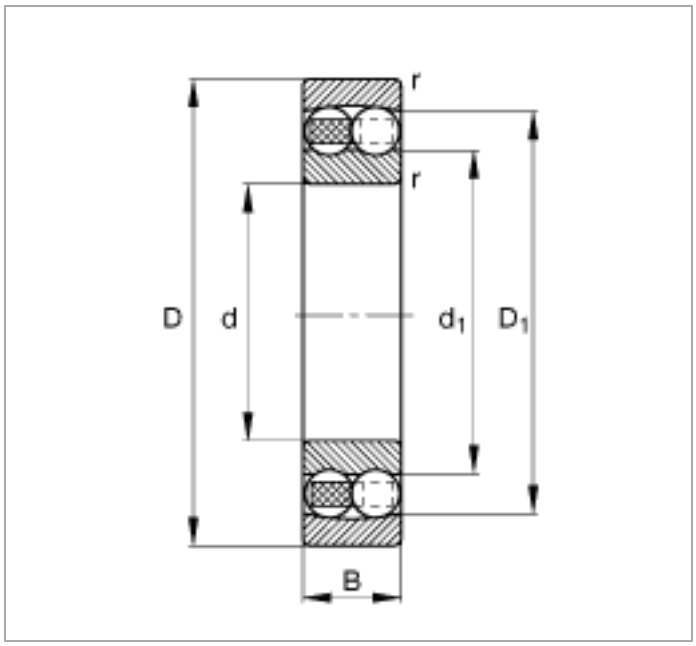
r
r
D
d
d1
D1
B

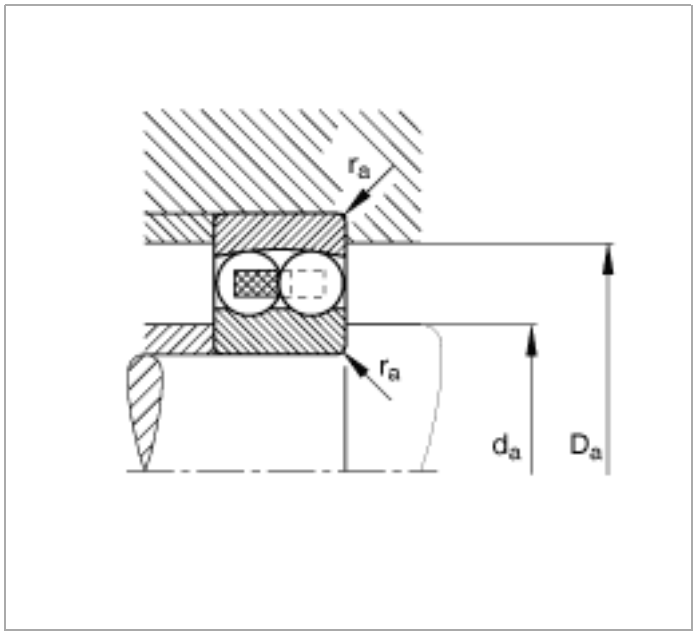
ra
ra
da
Da