ISSUE DATE: 08/19/2014

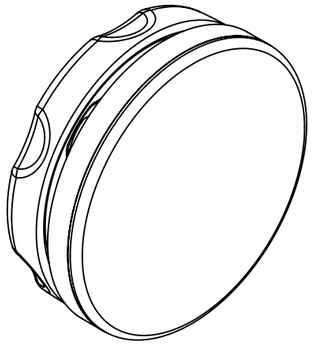

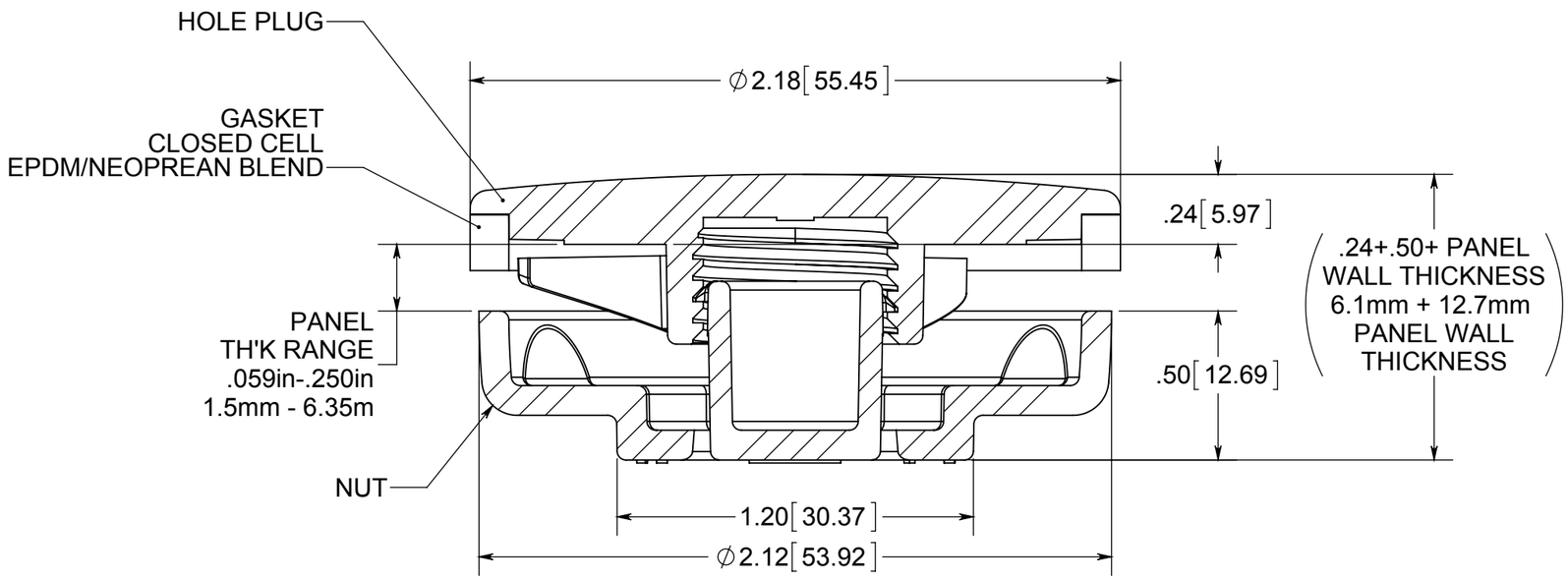

PLUGGED HOLE DIA RANGE:
1.687in-1.875in
42.85mm-47.63mm

TRADE SIZE REF:
1-1/4" CONDUIT (1.734in)

MATERIAL:
PLUG AND NUT - POLYCARBONATE
RAL 7035 LIGHT GRAY

PART No. HP125PCLG

for more information visit
www.hammfg.com
Data subject to change without notice

Drawing Not to Scale