Lovato electric
ENERGY AND AUTOMATION

# 11B125024220

THREE-POLE CONTACTOR, IEC OPERATING CURRENT ITH (AC1) = 1250A, AC COIL, 220...240VAC



| | | | |
|---|---|---|---|
| Product designation | | | Power contactor |
| Product type designation | | | B1250 |
| **Contact characteristics** | | | |
| Number of poles | | Nr. | 3 |
| Rated insulation voltage Ui IEC/EN | | V | 690 |
| Rated impulse withstand voltage Uimp | | kV | 8 |
| Operational frequency | | | |
| | min | Hz | 25 |
| | max | Hz | 400 |
| IEC Conventional free air thermal current Ith | | A | 1250 |
| Operational current Ie | | | |
| | AC-1 (≤40°C) | A | 1250 |
| | AC-1 (≤55°C) | A | 1050 |
| | AC-1 (≤70°C) | A | 880 |
| Rated operational power AC-1 (T≤40°C) | | | |
| | 230V | kW | 480 |
| | 400V | kW | 830 |
| | 500V | kW | 1100 |
| | 690V | kW | 1450 |
| Short-time allowable current for 10s (IEC/EN60947-1) | | A | 6500 |
| Protection fuse | | | |
| | gG (IEC) | A | 1250 |
| Making capacity (RMS value) | | A | 6300 |
| Breaking capacity at voltage | | | |
| | 440V | A | 6300 |
| | 500V | A | 5600 |
| | 690V | A | 5000 |
| Resistance per pole (average value) | | mΩ | 7 |
| Power dissipation per pole (average value) | | | |
| | Ith | W | 110 |
| Tightening torque for terminals | | | |
| | min | Nm | 35 |
| | max | Nm | 35 |
| | min | lbin | 25.8 |
| | max | lbin | 25.8 |
| Max number of wires simultaneously connectable | | Nr. | 2 |
| Conductor section | | | |
| AWG/Kcmil | | | |
| | max | | 2x 1500kcmil |
| Power terminal protection according to IEC/EN 60529 | | | IP00 |
| **Mechanical features** | | | |
| Operating position | | | |
| | normal | | Vertical plan |
| | allowable | | ±30° |
| Fixing | | | Screw |


The characteristics described in this document are subject to updates or modifications at any time. The descriptions, technical and functional information, illustrations and instructions in this brochure are purely illustrative, and are consequently not contractually binding

| | | | | |
|---|---|---|---|---|
| Weight | | | g | 4820 |
| Conductor section | | | | |
| | AWG/kcmil conductor section | | | |
| | | max | | 2x 1500kcmil |
| **Auxiliary contact characteristics** | | | | |
| Thermal current Ith | | | A | 16 |
| IEC/EN 60947-5-1 designation | | | | A600 - P600 |
| Operating current AC15 | | | | |
| | | 230V | A | 3 |
| | | 400V | A | 1.9 |
| | | 500V | A | 1.4 |
| Operating current DC12 | | | | |
| | | 110V | A | 5.7 |
| Operating current DC13 | | | | |
| | | 24V | A | 5.7 |
| | | 48V | A | 2.9 |
| | | 60V | A | 2.3 |
| | | 125V | A | 0.6 |
| | | 220V | A | 0.2 |
| | | 600V | A | 1.2 |
| **Operations** | | | | |
| Mechanical life | | | cycles | 5000000 |
| Electrical life | | | cycles | 700000 |
| **Safety related data** | | | | |
| Performance level B10d according to EN/ISO 13489-1 | | | | |
| | | rated load | cycles | 700000 |
| | | mechanical load | cycles | 5000000 |
| Mirror contats according to IEC/EN 609474-4-1 | | | | yes |
| EMC compatibility | | | | yes |
| **AC coil operating** | | | | |
| Rated AC voltage at 50/60Hz, 60Hz | | | | |
| | | min | V | 220 |
| | | max | V | 240 |
| AC operating voltage | | | | |
| | of 50/60Hz coil powered at 50Hz | | | |
| | pick-up | | | |
| | | min | %Us | 80 |
| | | max | %Us | 110 |
| | drop-out | | | |
| | | min | %Us | 20 |
| | | max | %Us | 60 |
| | of 50/60Hz coil powered at 60Hz | | | |
| | pick-up | | | |
| | | min | %Us | 80 |
| | | max | %Us | 110 |
| | drop-out | | | |
| | | min | %Us | 20 |
| | | max | %Us | 60 |
| | of 60Hz coil powered at 60Hz | | | |
| | pick-up | | | |
| | | min | %Us | 80 |
| | | max | %Us | 110 |
| | drop-out | | | |


The characteristics described in this document are subject to updates or modifications at any time. The descriptions, technical and functional information, illustrations and instructions in this brochure are purely illustrative, and are consequently not contractually binding

| | | | | |
|---|---|---|---|---|
| | | min | %Us | 20 |
| | | max | %Us | 60 |
| AC average coil consumption at 20°C | | | | |
| | of 50/60Hz coil powered at 50Hz | | | |
| | | in-rush | VA | 800 |
| | | holding | VA | 45 |
| | of 50/60Hz coil powered at 60Hz | | | |
| | | in-rush | VA | 800 |
| | | holding | VA | 45 |
| Dissipation at holding ≤20°C 50Hz | | | W | 40 |
| **DC coil operating** | | | | |
| DC rated control voltage | | | | |
| | | min | V | 220 |
| | | max | V | 240 |
| DC operating voltage | | | | |
| | pick-up | | | |
| | | min | %Us | 80 |
| **Max cycles frequency** | | | | |
| Mechanical operation | | | cycles/h | 1200 |
| **Operating times** | | | | |
| Average time for Us control | | | | |
| | in AC | | | |
| | | Closing NO | | |
| | | min | ms | 300 |
| | | max | ms | 450 |
| | | Opening NO | | |
| | | min | ms | 70 |
| | | max | ms | 130 |
| | in DC | | | |
| | | Closing NO | | |
| | | min | ms | 300 |
| | | max | ms | 450 |
| | | Opening NO | | |
| | | min | ms | 70 |
| | | max | ms | 130 |
| **UL technical data** | | | | |
| Contact rating of auxiliary contacts according to UL | | | | A600 - P600 |
| **Ambient conditions** | | | | |
| Temperature | | | | |
| | Operating temperature | | | |
| | | min | °C | -50 |
| | | max | °C | 60 |
| | Storage temperature | | | |
| | | min | °C | -60 |
| | | max | °C | 80 |
| Max altitude | | | m | 3000 |
| **Resistance & Protection** | | | | |
| Pollution degree | | | | 3 |
| **Dimensions** | | | | |


The characteristics described in this document are subject to updates or modifications at any time. The descriptions, technical and functional information, illustrations and instructions in this brochure are purely illustrative, and are consequently not contractually binding

# 11B125024220

THREE-POLE CONTACTOR, IEC OPERATING CURRENT ITH (AC1) = 1250A, AC COIL, 220...240VAC

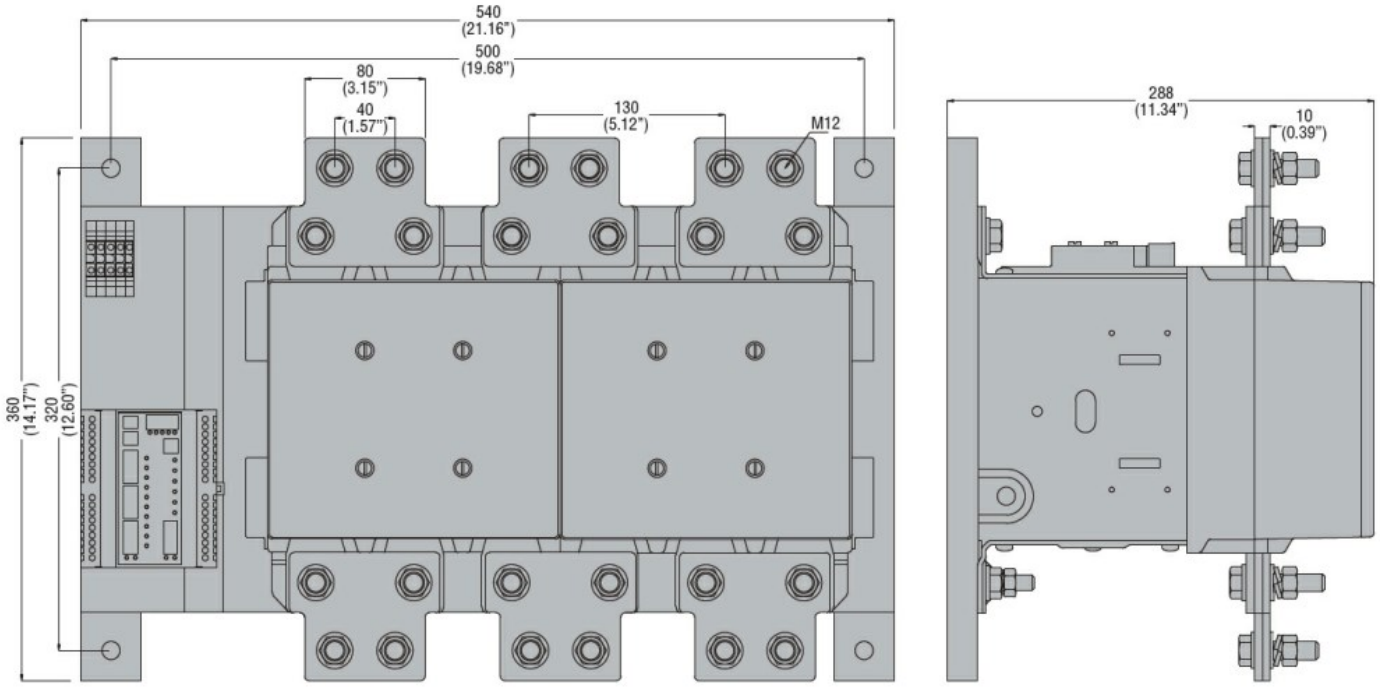


## Wiring diagrams

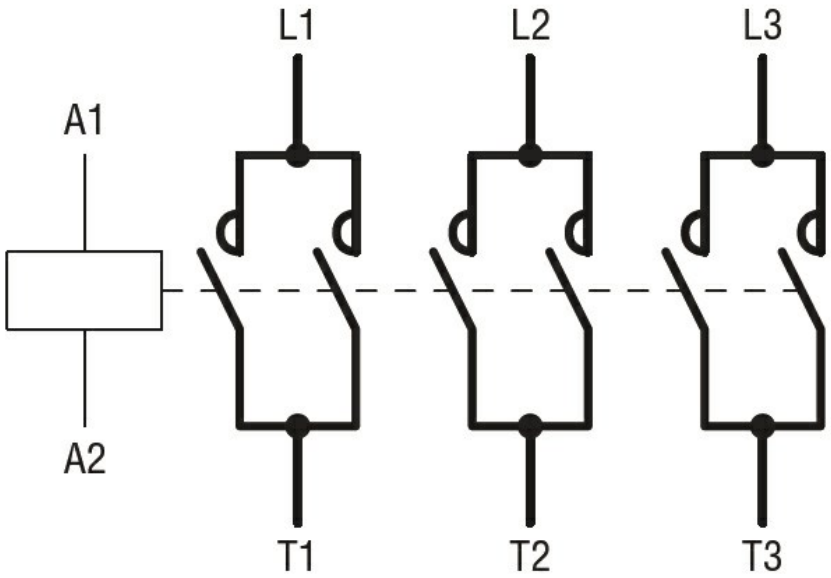


## Certifications and compliance

Compliance

| |
|---|
| CSA C22.2 n° 60947-1 |
| CSA C22.2 n° 60947-4-1 |
| IEC/EN 60947-1 |
| IEC/EN 60947-4-1 |
| UL 60947-1 |
| UL 60947-4-1 |

Certificates

/

## ETIM classification

| | |
|---|---|
| ETIM 8.0 | EC000066 - Power contactor, AC switching |


The characteristics described in this document are subject to updates or modifications at any time. The descriptions, technical and functional information, illustrations and instructions in this brochure are purely illustrative, and are consequently not contractually binding