REDUFIX

Pressure reducing valve

Tecnical Data Sheet



wattswater.eu

WATTS®

Description

REDUFIX is an ideal pressure reducing valve to protect hot water storage heaters, household appliances, drinks vending machine, water cooler.

- Compact : it takes up less space, easier to fit, it is at present the more unobtrusive underneath hot water storage heaters
- Ready to install : Factory preset, you can change the setting from 1.5 to 5 bar
- Tried and tested raliability : on the market for over 20 years, the REDUFIX is made in Somme in France in our production unit ISO9001 certified by BVQI
- Any positions : The REDUFIX can be fitted in any position
- Robust : Once fitted, it doesn't require any special maintenance
- Silent : The valve system design and types of seals used ensure operation with no vibrationi and no banging about.
- Specific flow: flow is appropriate to isolated appliances like washing machines or hot water storage heaters. It has a part in better thermostatic mixer control and controlled water consumption



REDUFIX

Pressure reducing valve

DN		Connection	PFA in bar	PS in bar	Ref.	Weight Kg
"	mm			L1		
1/2	-	Female / Female	15	15	**2282000**	0,20
3/4	-	Male / Female free nut	15	15	**2282210**	0,25
3/4	-	Female free nut / Male	15	15	**2282215**	0,25
3/4	-	Male / Male	15	15	**2282110**	0,23

Important notice :

The temperature and pressure indications given are under no circumstances a guarantee that they are suitable for your system. Therefore, it is essential to validate the use of the products under given operating conditions with our technical department.

Technical features	
Operating temperature	Continuous : 30 °C / Maxi. : 70°C*
Permissible operating pressure (PFA) in water	15 bar
Gauge connection	Female 1/4"
Setting range	1.5 to 5 bar. Factory preset (4bar at zero discharge for 3 bar working)
Mediums	Drinking water

*Risk of scaling if used in permanent service above 30°C

Nomenclature and materials

N°	Description	Materials	EURO
1	Body	Brass DZR	CW625N
2	Finish	Nickel plated	
3	Spring	Zing plated steel	
4	Piston	PSU (polysulfone polymer)	PPO+PS-GS30
5	Membrane & seal	EPDM & NBR	
6	Head	Brass	CW617-4MS
7	Cap	Brass	ZAMAK ZP5
8	Plug for gauge connection	P.A.	Grivory GVS FWA EPDM

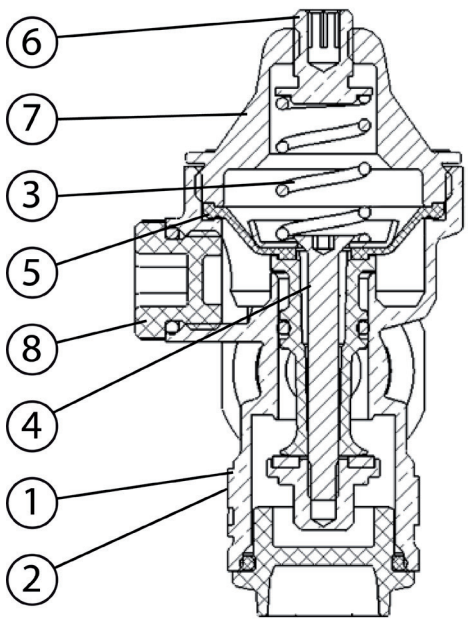

Approvals

ACS WRAS kiwa Ref.2282616-2282118

Application

REDUFIX is an ideal pressure reducing valves to protect hot water storage heaters and houshold appliances.

It is directly fitted upstream of the appliance that you want to protect or to the inlet of the water circuit that you want to protect (kitchen, bathrooms, garden piping...etc)

Installation

- Fit the pressure reducing valves in accessible and non-submersible place (not on the floor to enable maintenance and avoid any risks related to frost)
- Rinse, clean and purge pipes before fitting the REDUFIX
- Respect the direction of flow aas indicated by the arrow engrave on the body
- Fit the REDUFIX to the inlet of the water circuit that you want to protect (kitchen, bathrooms, garden piping etc)
- The setting can be adjusted between 1.5 and 5 bar. To raise or lower the setting, screw or unscrew the setting screw on the top of the appliance with a screwdriver
- After opening then closing a valve on the downstream circuit, check the pressure on the pressure gauge
- You do not have to comply with any special position
- The REDUFIX technical spécifications do not change wichever operating plan is used
- The hexagonal plus opposite the head can be taken off for blowing down or draining

Operation

Flow :

During water flow, water pressure exercised on the diaphragm decreases, which allows the spring to relax. The piston disc-yoke assembly moves towards the bottom to allow the water to pass.

Flow stoppage :

When water flow stops, the downstream pressure pushes on the diaphragm again, the spring goes back to its initial position, which leads to the valve closing, stopping water from flowing freely.

Setting

The adjustment must be done without flow ie no downstream outflow. The REDUFIX pressure reducing valves is factory pre-set at 3 bar.

They remain adjustable within a 1,5 bar to 5 bar range.

To increase the pressure, tighten the adjusting screw (clockwise as you look at the screw from above). To reduce the pressure, undo the adjusting screw (anticlockwise as you look at the screw from above), slightly open a tap for a moment, close again, then tighten the screw again until you obtain a desired pressure.

Max. upstream pressure : 15 bar.

Maintenance

Due to the design, the REDUFIX pressure reducing valves is not affected by scale or dirt and does not need any maintenance if is fitted by a professionnal.

Diaphragm, spring, seat, valve are largely dimensioned to allow precise and constant adjustment all allowing a high flow.

Operating characteristics

REDUFIX - Headloss chart

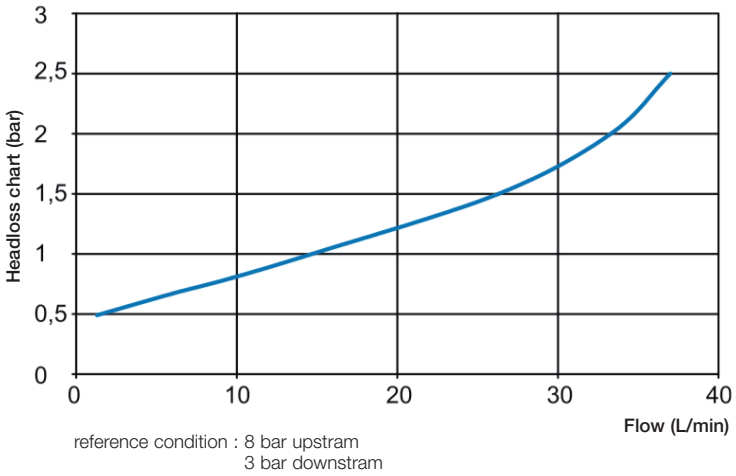

reference condition : 8 bar upstram
3 bar downstram

Sizing

Connection	A	B	C	D
	„	mm	mm	mm
F / F	1/2	78	60	-
M / F free nut	3/4	78	75,5	67
F free nut / M	3/4	78	75,5	67
M / M	3/4	78	65	-

REDUFIX

F/F 1/2”

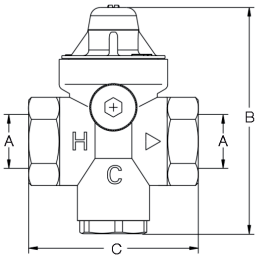

M/F free nut 3/4”

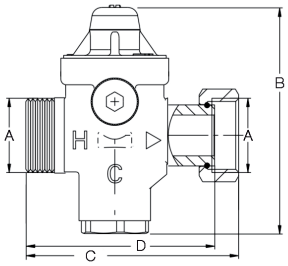

F free nut/M 1/2”

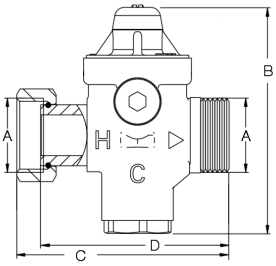

M/M 3/4”

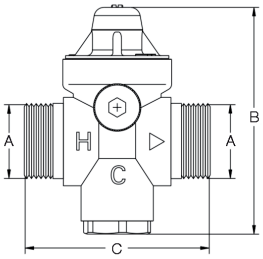

The descriptions and photographs contained in this product specification sheet are supplied by way of information only and are not binding.
Watts reserves the right to carry out any technical and design improvements to its products without prior notice. Warranty : All sales and contracts for sale are expressly conditioned on the buyer's assent to Watts terms and conditions found on its website at www.watts.com. Watts hereby objects to any term, different from or additional to Socla terms, contained in any buyer communication in any form, unless agreed to in a writing signed by an officer of Watts.

WATTS INDUSTRIES France
1590 avenue d'Orange • CS 10101 Sorgues 84275 VEDENE CEDEX • France
Tel. +33 (0)4 90 33 28 28 • Fax +33 (0)4 90 33 28 39
contact@wattswater.com • www.wattswater.eu

© 2020 Watts