US-320

US-320 - Small Profile USB 1 Port RS422/485

- Our smallest form factor USB to Serial
- High retention USB connector for an unshakeable connection
- Comes with 0. 5m USB cable
- Works where many other USB to Serial devices do not
- Industrial Specification: IP-50
  -40°C to +80°C/-40°F to +176°F



Ultra small USB to serial adapter suitable for any environment

Have confidence, this product will match whatever baud rate your equipment needs without data loss. Includes large 512 Byte TxD and RxD FIFOs supporting high data throughput at high baud rates. Works across the full spectrum of baud rates up to 921,600 including standard and arbitrary values.

We provide our own software drivers - eliminating many common problems with USB to Serial - giving you have a reliable, stable, native com port solution.

"I have tried many off the shelf USB to Serial adapters. Some break easily, others only work some of the time. Brainboxes installed in seconds and could communicate with anything I threw at it, I would recommend this device to anyone."

Colin Young, Nutek Europe

Microsoft Gold Partner Drivers for all popular operating systems including latest Windows

The high retention USB connection requires a minimum withdrawal requirement of 15N (thats a force of 1.5Kg or 3.4lbs). Connectors have orange color-coded insulator to differentiate from standard USB connectors. The connection is so strong that the port is capable of taking the weight of a bottle of champagne.





sales@brainboxes.com Tel: 0151 220 2500 Toll Free USA: +1 (888) 958 5538

US-320 - Small Profile USB 1 Port RS422/485

brainboxes
www.brainboxes.com

Housing and connectors

IP-50 rated non-conducting polyamide case

DB9 Connector - 9 Pin Male

High Retention USB Connector

Wall mounting screw recess







Environmental

Operating Temperature	**-40°C to +80°C/-40°F to +176°F**

Power Supply

Power Consumption	50mA @ 5V
Power Supply input	+5V through USB cable (supplied)

Port Settings - RS422/485

Baud Rate	From 110 - 1 MegaBaud - Any custom Baud rate accepted
Data Bits	5,6,7 or 8
Parity	Odd, Even, None, Mark or Space
Stop Bits	1 or 2
Flow Control	RTS/CTS, XON/XOFF
Tx/Rx Modes	Full Duplex, Half Duplex Autogating

RS422/485

Pin 1	TXD-
Pin 2	TXD+
Pin 3	RTS-
Pin 4	RTS+
Pin 5	GND
Pin 6	RXD-
Pin 7	RXD+
Pin 8	CTS
Pin 9	CTS+

RS422/485 Pinout (9 Pin)

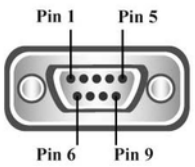

IP-50 rated non-conducting case



Wall mounting option



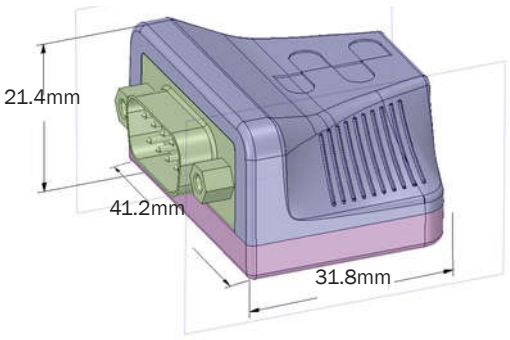

Lifetime Warranty and Support:

We can help with every aspect of your project, from getting you up and running to custom application.

GB AEOF 00031/11

Optional: US-063 USB Type A Plug to Type B Plug 1000mm



1m cable available: US-063

Brainboxes have additional and alternative length cables available that are compatible with this product

Packaging Information

Packaging	Installation CD including manual, Microsoft signed drivers & utilities, Quick Start Guide
Packaged Weight	0.155 kg, 5.47 ounces
Packaged Dims	160x135x45 mm, 6.3x5.3x1.8 inches
GTIN Universal Code	837324003673

Trademarks and logos are the property of Brainboxes Ltd. All other trademarks are the property of their respective owners.