Brand of NTN Group

Technical data

UK320G2H

Insert bearings



Spherical outer diameter with locking pin, fixing by adapter sleeve, seal with slinger

VISUAL (S)

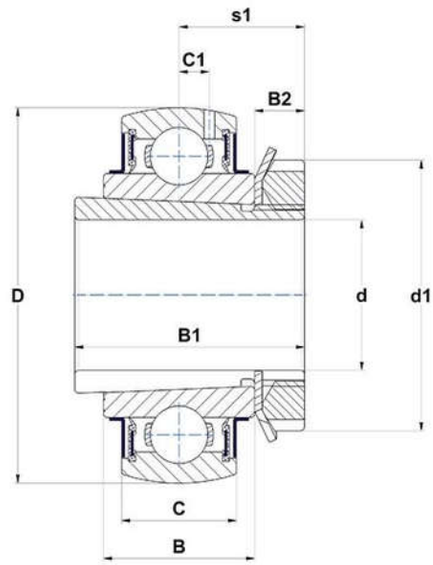

PRODUCT DEFINITION

Brand	SNR
B - Width of Inner Ring	68 mm
B1 - Overall width Inner Ring	97 mm
B2 - Width of eccentric locking collar/nut	20 mm
C - Width of Outer Ring	54 mm
C1 - Distance center of OR to center of lubrication zone	19 mm
d - Shaft diameter	90 mm
d1 - Outer dia of eccent. Lock. collar / nut of adapter sleeve	130 mm

UK320G2H
Insert bearings

PRODUCT DEFINITION	
D - Outer diameter of OR	215 mm
f0 - Factor	13.2

PRODUCT PERFORMANCE	
C - Dynamic load rating	171600000 mN
C0 - Static load rating	140000000 mN
Operating temperature min.	253,15 °K
Operating temperature max.	373,15 °K

OTHER FEATURES	
Mass	10,61 kg
Adapter sleeve designation	H2320

BEARING FREQUENCIES	
BPFO - Over rolling frequency on outer ring (60 rpm)	3.073 Hz
BPFI - Over rolling frequency on inner (60 rpm)	4.927 Hz
BSF - Over rolling frequency on rolling element (60 rpm)	4.082 Hz
BRF - Rotational frequency – rolling element (60 rpm)	2.041 Hz
FTF - Rotational frequency - cage (60 rpm)	0.384 Hz