SA1B1NA320R

SURGE PROTECTION DEVICE TYPE 1 AND 2 MONOBLOCK, IEC IMPULSE CURRENT IIMP (10/350MS) 25KA PER POLE, 1P+N. WITH CONTACT REMOTE



Product designation			Surge protection device (SPD)
Product type designation			SA1B
Operating voltage type			AC
Application			AC Power lines
Number of poles			1P+N
Number of DIN modules			4
Relay output			Yes
SPD according to IEC/EN 61643-11			YES
Electrical features			
IEC Maximum continuous voltage Uc		V	320
IEC Impulse current Iimp 10/350 (L-N/N-PE)		kA	25 / 50
IEC Maximum discharge current Imax 8/20 (L-N/N-PE)		kA	100 / 100
IEC Rated discharge current (IEC) In 8/20 (L-N/N-PE)		kA	25 / 50
IEC Voltage protection level Up (L-N/N-PE)		kV	<1.4 / <1.3
Temporary overvoltage (TOV) resistance Ut (L-N for 5s)		V	335
IEC Residual voltage Ures (L-N/N-PE) at 5kA (8/20)		kV	1
IEC Follow current If (N-PE) rms		A	>100
Tripping time ta (L-N/N-PE)		ns	<25 / 100
Thermal insulation protection			YES
IEC Backup protection fuse with supply line fuse >250A (L-N/N-PE)		Class/A	250A gL/gG
IEC Maximum short circuit current at 50Hz		kA	50
Status indicator - operating / end of life			Frontal indication/Aux contact
Ambient conditions			
Operating temperature			
	min	°C	-40
	max	°C	80
Max altitude		m	2000
Mechanical features			
Fixing			DIN rail
Conductor section Flexible max (IEC)		mm²	25
Conductor section Rigid max (IEC)		mm²	35
Weight		g	390
Relay output for remote status indication			
Type of contact			CO
Rated current at			
	125V AC	A	3
	250V AC	A	0.5
	125V DC	A	0.2
	250V DC	A	0.1
Dimensions			

The characteristics described in this document are subject to updates or modifications at any time. The descriptions, technical and functional information, illustrations and instructions in this brochure are purely illustrative, and are consequently not contractually binding

SA1B1NA320R

SURGE PROTECTION DEVICE TYPE 1 AND 2 MONOBLOCK, IEC IMPULSE CURRENT IIMP (10/350MS) 25KA PER POLE, 1P+N. WITH CONTACT REMOTE

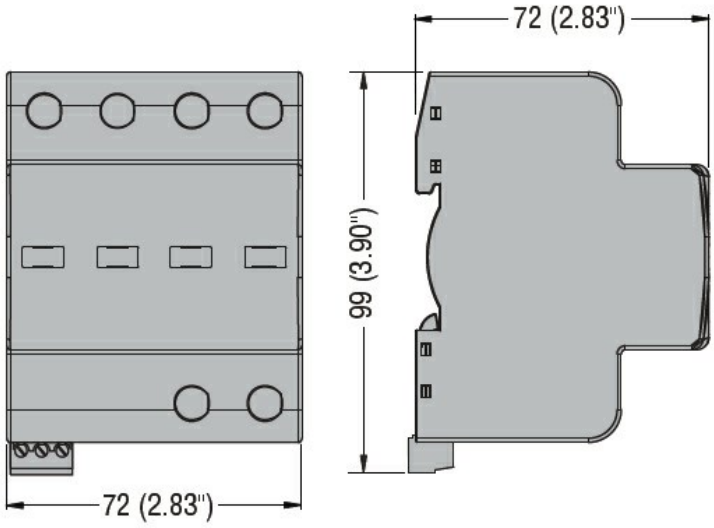

Wiring diagrams

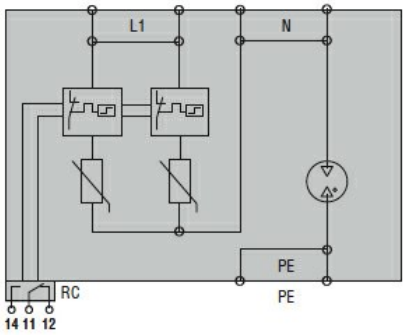

Certifications and compliance

Compliance

IEC/EN 61643-11

Certificates

EAC

The characteristics described in this document are subject to updates or modifications at any time. The descriptions, technical and functional information, illustrations and instructions in this brochure are purely illustrative, and are consequently not contractually binding