11G48560

DELAYED AUXILIARY CONTACT 1NO+1NC (PNEUMATIC OPERATION) ON ENERGISATION FOR FRONT CENTRE MOUNTING. SCREW TERMINALS, FOR BF... SERIES CONTACTORS, 60S



Mechanical features

Fixing	Front centre mounting

Auxiliary contact characteristics

Type of contact	1NO + 1NC

Dimensions

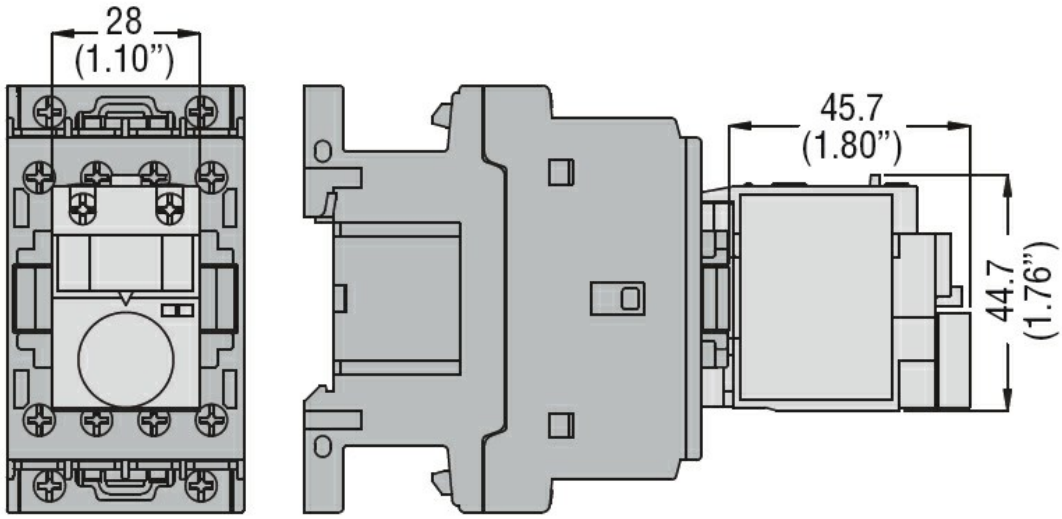

Wiring diagrams

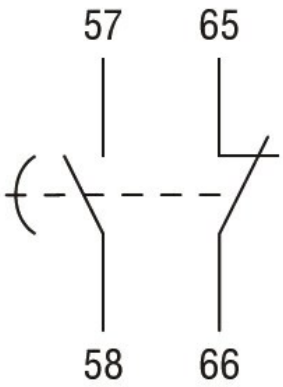

Certifications and compliance

Compliance

CSA C22.2 n° 60947-1
CSA C22.2 n° 60947-5-1
IEC/EN 60947-1
IEC/EN 60947-5-1
UL 60947-1
UL 60947-5-1

Certificates

CCC

The characteristics described in this document are subject to updates or modifications at any time. The descriptions, technical and functional information, illustrations and instructions in this brochure are purely illustrative, and are consequently not contractually binding

CSA
cURus
EAC

ETIM classification

ETIM 8.0	EC002498 - Accessories/spare parts for low-voltage switch technology

The characteristics described in this document are subject to updates or modifications at any time. The descriptions, technical and functional information, illustrations and instructions in this brochure are purely illustrative, and are consequently not contractually binding