ESR5-NO-31-230VAC
Safety relay



Powering Business Worldwide

All brand and product names are trademarks or registered trademarks of their respective owners.

Emergency On Call Service
Please call your local representative:
http://www.eaton.eu/aftersales
or
Hotline After Sales Service:
+49 (0) 180 5 223822 (de, en)
AfterSalesEGBonn@eaton.com

Original operating manual
The German-language edition of this document is the original operating manual.

Translation of the original operating manual
All editions of this document other than those in German language are translations of the original operating manual.

1. Edition 2019, publication date 12/19
See revision protocol in the "About this manual" chapter.

© 2019 by Eaton Industries GmbH, 53105 Bonn, Germany

Editor: René Wiegand

All rights, including those of translation, reserved.

No part of this manual may be reproduced, stored in a retrieval system, or transmitted in any form or by any means, electronic, mechanical, photocopying, micro-filming, recording, or otherwise, without the prior written permission of Eaton Industries GmbH, Bonn, Germany.

Subject to alteration.



Danger!
Dangerous electrical voltage!

Before commencing the installation

- Disconnect the power supply of the device.
- Ensure that devices cannot be accidentally retriggered.
- Verify isolation from the supply.
- Ground and short-circuit.
- Cover or enclose neighbouring units that are live.
- Follow the engineering instructions (IL) of the device concerned.
- Only suitably qualified personnel in accordance with EN 50110-1/-2 (VDE 0105 Part 100) may work on this device/system.
- Before installation and before touching the device ensure that you are free of electrostatic charge.
- The functional earth (FE) must be connected to the protective earth (PE) or to the potential equalizing. The system installer is responsible for implementing this connection.
- Connecting cables and signal lines should be installed so that inductive or capacitive interference do not impair the automation functions.
- Install automation devices and related operating elements in such a way that they are well protected against unintentional operation.
- Suitable safety hardware and software measures should be implemented for the I/O connection so that a cable or wire breakage on the signal side does not result in undefined states in the automation device.
- Ensure a reliable electrical isolation of the low voltage for the 24 V supply. Only use power supply units complying with IEC 60364-4-41 or HD 384.4.41 S2 (VDE 0100 part 410).
- Deviations of the mains voltage from the nominal value must not exceed the tolerance limits given in the technical data, otherwise this may cause malfunction and dangerous operation.
- Emergency-Stop devices complying with IEC/EN 60204-1 must be effective in all operating modes of the automation devices. Unlatching the emergency switching off devices must not cause restart.
- Built-in devices for enclosures or cabinets must only be run and operated in an installed state, desk-top devices or portable devices only when the housing is closed.
- Measures should be taken to ensure the proper restart of programs interrupted after a voltage dip or failure. This should not cause dangerous operating states even for a short time. If necessary, emergency switching off devices should be implemented.
- Wherever faults in the automation system may cause damage to persons or property, external measures must be implemented to ensure a safe operating state in the event of a fault or malfunction (for example, by means of separate limit switches, mechanical interlocks, etc.).
- During operation, and depending on their degree of protection, variable frequency drives may have live, uninsulated, moving, and/or rotating parts, as well as hot surfaces.
- The impermissible removal of the required cover, improper installation or incorrect operation of the motor or variable frequency drive can cause the failure of the device and serious injury and/or material damage.
- Comply with all applicable national accident prevention regulations (e.g. BGV A3) when working with energized variable frequency drives.
- The electrical installation must be carried out in accordance with the relevant regulations (e.g. with regard to cable cross sections, fuses, PE).
- All transport, installation, commissioning and maintenance work must only be carried out by trained personnel (observe IEC 60364, HD 384 or DIN VDE 0100 and national accident prevention regulations).
- If applicable, systems in which variable frequency drives are installed must be equipped with additional monitoring and protective devices in accordance with the applicable safety regulations, e.g., the German Equipment and Product Safety Act, accident prevention regulations, etc. Making changes to the variable frequency drives by using the operating software is allowed.
- Keep all covers and doors closed during operation.
- When designing the machine, the user must incorporate mechanisms and measures that limit the consequences of a drive controller malfunction or failure (an increase in motor speed or the motor?9s sudden stop) so as to prevent hazards to people and property, e.g.:
  - Additional stand-alone devices for monitoring parameters that are relevant to safety (speed, travel, end positions, etc.)
  - Electrical and non-electrical safety devices (interlocks or mechanical locks) for mechanisms that protect the entire system
  - Due to the possibility of there being capacitors that are still holding a charge, do not touch live device parts or terminals immediately after disconnecting the variable frequency drives from the supply voltage. Heed the corresponding labels on the variable frequency drives

Content

0	**About This Manual**	**3**
0.1	List of revisions	3
0.2	Target group	3
0.3	Additional documents	3
0.4	Abbreviations and symbols	4
0.4.1	Risk of material damage	4
0.4.2	Hazard warnings of personal injury	4
0.4.3	Tips	4
0.5	Ordering data	4
1	**Safety notes**	**5**
2	**Description**	**6**
3	**Operating and indication elements**	**7**
4	**Basic circuit diagram**	**8**
5	**Derating**	**9**
6	**Diagnostics**	**10**
7	**Application examples**	**11**
7.1	Two-channel emergency stop circuit with cross-circuit detection	11
7.2	Single-channel emergency stop circuit	12
8	**Technical data**	**13**
9	**Glossary**	**16**

0 About This Manual

This manual applies to the ESR5-NO-31-230VAC safety relay.

0.1 List of revisions

The following significant amendments have been introduced since previous issues:

Publication date	Page	Keyword	new	modified	deleted
12/19		First edition	–	–	–

0.2 Target group

This manual is intended for qualified personnel installing, operating, and maintaining the ESR5-NO-31-230VAC safety relay.



CAUTION

Installation requires a qualified electrician

0.3 Additional documents

For further information, see the following documentation:

- Instruction leaflet IL05013032Z2018_06

WARNING

Make sure you always use the latest documentation.
It can be downloaded from the product at: www.eaton.eu/esr5

0.4 Abbreviations and symbols

The symbols used in this manual have the following meanings:

▶ indicates actions to be taken.

0.4.1 Risk of material damage

CAUTION

Warns about the possibility of material damage.

0.4.2 Hazard warnings of personal injury



CAUTION

Warns of the possibility of hazardous situations that may possibly cause slight injury.



WARNING

Warns of the possibility of hazardous situations that could result in serious injury or even death.



DANGER

Warns of hazardous situations that result in serious injury or death.

0.4.3 Tips



Indicates useful tips.

0.5 Ordering data

ESR5-NO-31-230VAC safety relay: Catalog No. 119380

1 Safety notes



WARNING

Risk of electric shock
During operation, parts of electrical switching devices carry hazardous voltages.
Before working on the switching device, disconnect the power.
Please observe the safety regulations of electrical engineering and industrial safety and liability associations!
Disregarding these safety regulations may result in death, serious personal injury or damage to equipment.
Startup, mounting, modifications, and upgrades should only be carried out by a skilled electrical engineer!



WARNING

Risk of automatic machine restart!
For emergency stop applications, the machine must be prevented from restarting automatically by a higher-level control system.
Protective covers must not be removed when operating electrical switching devices.



WARNING

Danger due to faulty devices!
The devices may be damaged following an error and correct operation can no longer be ensured.
In the event of an error, replace the device immediately.
Repairs to the device, especially if the housing must be opened, may only be carried out by the manufacturer or authorized persons. Otherwise the warranty is invalidated.

CAUTION

Risk of damage to equipment due to incorrect installation
For reliable operation, the safety relay must be installed in housing protected from dust and humidity (IP54).
Carry out wiring according to the application.
Refer to the "Application examples" section for this.

CAUTION

Risk of damage to equipment due to noise emissions
When operating relay modules the operator must meet the requirements for noise emission for electrical and electronic equipment (EN 61000-6-4) on the contact side and, if required, take appropriate measures.

2 Description

The ESR5-NO-31-230VAC safety relay can be used in safety circuits according to EN 60240-1 and IEC 61508.

With this switching device, circuits are interrupted in a safety-oriented manner.

Control is via a single channel or two channels, either with automatic or manual monitored start circuit.

Depending on the external wiring, up to category 4, PL e according to EN ISO 13849-1 or SILCL 3 according to EN 62061 can be achieved.

The safety relay is equipped with three enabling current paths that drop out without delay corresponding to stop category 0 according to EN 60204-1.

Features

- Emergency stop and safety door monitoring
- Suitable up to category 4, PL e (EN ISO 13849-1), SILCL 3 (EN 62061)
- Single-channel or two-channel wiring with cross-circuit detection
- 3 enable current paths
- 1 signaling current path
- Screw terminal blocks for plug-in

3 Operating and indication elements

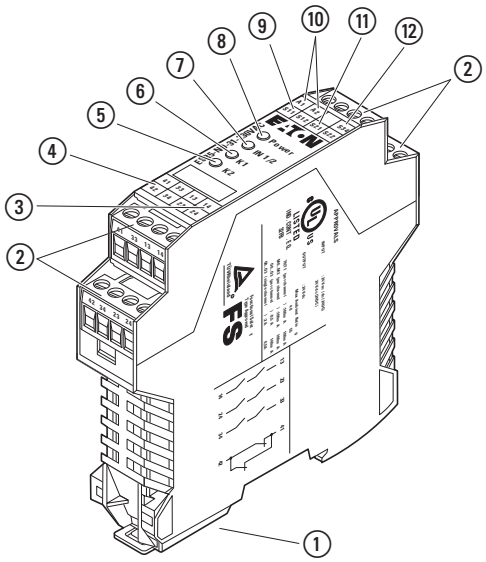

Figure 1: ESR5-NO-31-230VAC

① Metal lock for mounting on the DIN rail
② COMBICON plug-in screw terminal blocks
③ 13/14, 23/24, 33/34 - enabling current paths
④ 41/42 - signaling current path
⑤ LED status indicator, green - K2
⑥ LED status indicator, green - K1
⑦ LED status indicator, green - IN 1/2
⑧ LED status indicator, green - Power
⑨ S11/S12 - input circuit
⑩ S21/S22 - input circuit
⑪ Power supply
⑫ S34 - start circuit

4 Basic circuit diagram

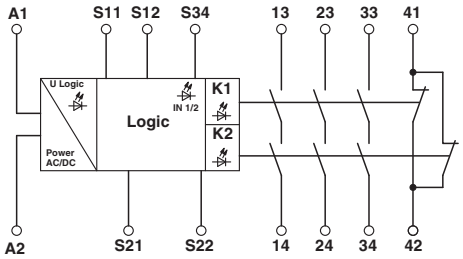

Figure 2: Block diagram

Designation	Explanation
A1/A2	Safety relay input voltage
S11/S12	Safety sensor/switch 1 input circuit
S21/S22	Safety sensor/switch 2 input circuit
S34	Start circuit
13/14	Undelayed enabling current path 1
23/24	Undelayed enabling current path 2
33/34	Undelayed enabling current path 3
41/42	Signaling current path

5 Derating

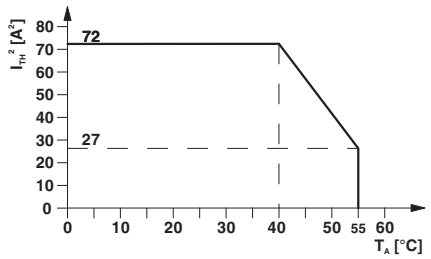

Figure 3: Derating curve

6 Diagnostics

○ – LED off

● – LED on

Table 1: Diagnostic description

	Power	IN1/2	K1	K2	Fault	Remedy
Connection/ voltage error	○	○	○	○	Supply voltage not present.	Apply supply voltage.
	●	●	●	○	Supply voltage too low.	Adjust supply voltage.
	●	○	○	○	The enable circuits are connected incorrectly or not connected at all.	Check the connection of the enable circuits.
Cross-circuit	○	○	○	○	Between both enable circuits S11- S12 and S21-S22. E.g., for emergency stop.	Remove cross-circuit.
Short circuit	○	○	○	○	Between contact points A1 and A2.	Remove short circuit.
	●	●	●	○	Between S11 and S12. Fault detection on next demand.	
	●	●	○	●	Between S21 and S22. Fault detection on next demand.	
Fault in reset circuit	●	●	○	○	Faulty reset button, short circuit between S12 and S34. No fault detection on initial start, only on first new demand.	Replace reset button. Remove short circuit.
Fault with internal cause	●	●	○	●	Enable contact(s) of K1 faulty.	Replace safety relays.
	●	●	●	○	Enable contact(s) of K2 faulty.	
	●	●	○	○	Enable contact(s) of K1 and K2 faulty.	

7 Application examples

7.1 Two-channel emergency stop circuit with cross-circuit detection

- Manual activation with connection at S12-S34
- Suitable up to category 4, PL e (EN ISO 13849-1), SILCL 3 (EN 62061)

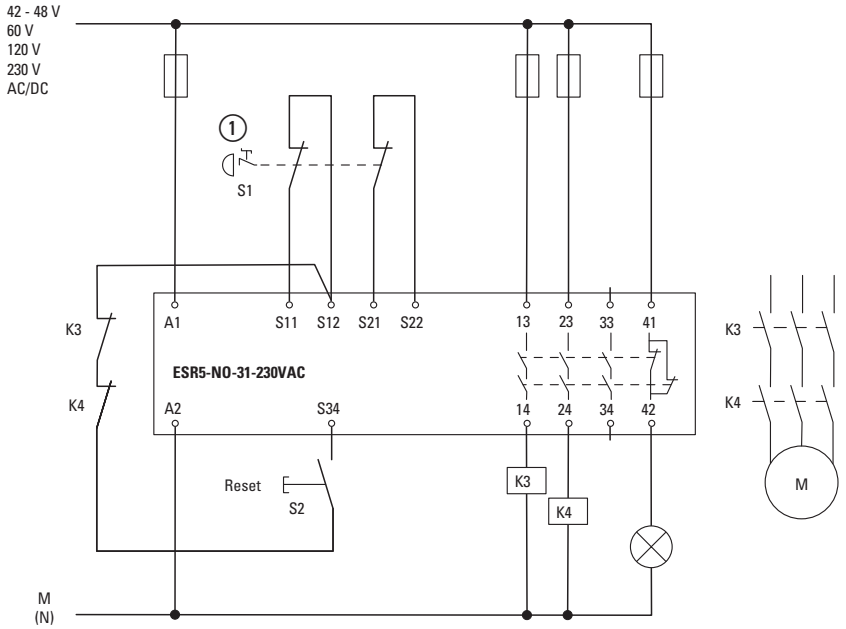

Figure 4: Emergency stop with cross-circuit detection and manually monitored reset

① Emergency stop

7.2 Single-channel emergency stop circuit

- Automatic activation with connection at S22-S34
- Suitable up to category 1, PL c (EN ISO 13849-1), SILCL 1 (EN 62061)

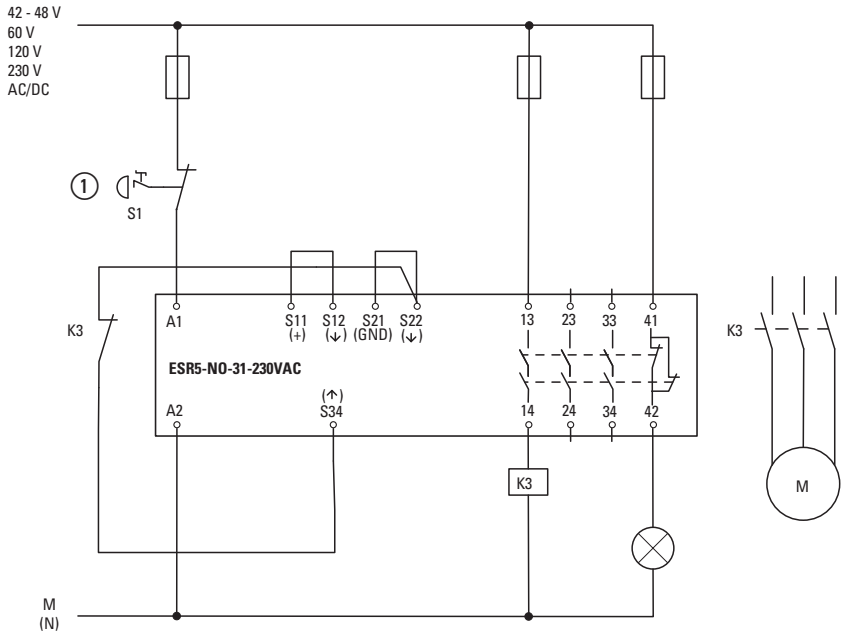

Figure 5: Emergency stop with automatic start

① Emergency stop

8 Technical data

Input data	
Nominal input voltage U_N	230 V AC/DC
Input voltage range (factor)	0.85 - 1,1
Typical input current	22 mA
Voltage at input/start and feedback circuit	~ 24 V DC
Max. permissible overall conductor resistance (Input and reset circuit at U_N)	50 Ω
Typical response time	40 ms (manual start)
Typical pick-up time	330 ms (when controlled via A1)
Typical release time	150 ms (when controlled via A1) 20 ms (when controlled via S11/S12 and S21/S22)
Recovery time	1 s
Maximum switching frequency	0.5 Hz
Operating voltage display	Green LED
Status display	Green LED
Protective circuit	Surge protection Varistor 275 V_{RMS} (A1-A2)
Output data	
Contact type	3 enabling current paths 1 signaling current path
Contact material	$AgSnO_2$ + 0,2 µm Au
Minimum switching voltage	10 V AC/DC
Maximum switching voltage	250 V AC/DC
Limiting continuous current	6 A (N/O contact) 5A (N/C contact)
Maximum inrush current	6 A
Inrush current, minimum	10 mA
Sq. Total current $(I_{TH})^2 = (I_1)^2 + (I_2)^2 + (I_3)^2$	72 A^2 (see derating curve → Figure 3, page 9)
Interrupting rating (ohmic load) max.	144 W (24 V DC, τ = 0 ms) 230 W (48 V DC, τ = 0 ms) 68 W (110 V DC, τ = 0 ms) 88 W (220 V DC, τ = 0 ms) 2000 VA (250 V AC, τ = 0 ms)
Maximum interrupting rating (inductive load)	48 W (24 V DC, τ = 40 ms) 40 W (48 V DC, τ = 40 ms) 35 W (110 V DC, τ = 40 ms) 33 W (220 V DC, τ = 40 ms)
Switching capacity min.	0.4 W
Mechanical service life	~ 10^7 cycles
Switching capacity (360 cycles/h)	6 A (24 V DC) 5 A (230 V AC)
Switching capacity (3600 cycles/h)	3 A (24 V (DC-13)) 3 A (230 V (AC-15))

Output fuse	10 A gL/gG NEOZED (N/O contact) 6 A gL/gG NEOZED (N/C contact)
General data	
Relay type	Electromechanically forcibly guided, dust-proof relay
Nominal operating mode	100 % operating factor
Degree of protection	IP20
Min. degree of protection of inst. location	IP54
Mounting position	any
Mounting type	DIN rail mounting
Air and creepage distances between the power circuits	DIN EN 50178/VDE 0160
Rated insulation voltage	250 V
Rated surge voltage / insulation	4 kV / basic insulation (safe isolation, reinforced insulation, and 6 kV between A1-A2/logic/enabling and signaling current paths)
Pollution degree	2
Surge voltage category	III
Dimensions	
W x H x D	22.5 x 99 x 114.5 mm
Connection data	
Conductor cross section, solid	0.2 mm^2 - 2.5 mm^2
Conductor cross section, stranded	0.2 mm^2 - 2.5 mm^2
Conductor cross section AWG/kcmil	24 - 12
Stripping length	7 mm
Ambient conditions	
Ambient temperature (operation)	-20 °C - 55 °C
Ambient temperature (storage/transport)	-40 °C - 70 °C
Max. permissible relative humidity (operation)	75 %
Max. permissible humidity (storage/transport)	75 %
Certification / Approvals	
Approvals	
Safety data	
Stop category according to IEC 60204	0
Safety parameters for IEC 61508 - High demand	
SIL	3
PFH_d	3.6 x 10^{-10} per hour
Demand rate	< 12 months
Proof test interval	240 months
Duration of use	240 months

The data only applies if the safety function is demanded at least once a year. The specifications apply assuming the following calculation basis	
B_{10d}	300000 (at 5 A DC-13)
d_{op}	365 days
h_{op}	24 h
t_{Cycle}	3600 s
Safety parameters for IEC 61508 - Low demand	
SIL	3
$MTTF_d$	19346 years
PFD_{avg}	1.50×10^{-4}
Proof test interval	78 months
Duration of use	240 months
Safety characteristic data according to EN ISO 13849	
Category	4
Performance Level	e
CCF	Passed
The data only applies if the safety function is demanded at least once a year. The specifications apply assuming the following calculation basis	
B_{10d}	300000 (at 5 A DC-13)
d_{op}	365 days
h_{op}	24 h
t_{Cycle}	3600 s

9 Glossary

Abbreviation	Explanation
AOPD	**Active optoelectronic protective device** Device with a sensor function that is generated by optoelectronic transmit and receive elements, which detects the interruption of optical radiation generated in the device by an opaque object located in the specified protective field (or for a photoelectric barrier on the axis of the light beam). In DIN EN 692 (mechanical presses), DIN EN 693 (hydraulic presses), and EN 12622 (hydraulic trimming presses), the abbreviation AOS is used as a synonym for AOPD.
AOPDDR	**Active optoelectronic protective device responsive to diffuse reflection** Device with a sensor function that is generated by optoelectronic transmit and receive elements, which detects the diffuse reflection of optical radiation generated in the device by an object located in a protective field specified in two dimensions.
Cat. / Category	Classification of the resistance to faults according to EN ISO 13849-1.
CCF	**Common cause failure**
DC	**Diagnostic coverage**
ESPE	**Electro-sensitive protective equipment**
Mission Time T_M	Duration of use
MTTF / $MTTF_d$	**Mean time to failure** / **mean time to dangerous failure**
PFD	**Probability of failure on demand (low demand)**
PFH_d	**Average frequency of a dangerous failure per hour**
PL	**Performance level** Classification of the ability of safety functions to meet a safety demand
SIL	**Safety integrity level**
SILCL	**SIL claim limit**
SRCF	**Safety-related control function**
SRECS	**Safety-related electrical control system** (Safety-related electrical, electronic, and programmable electronic control system)
SRP	**Safety-related part**
SRP/CS	**Safety-related parts of control system**