Manually operated valves - Series 1,3,4

Product code: 378-905

Datasheet creation date: 10/03/2025 12:07

Check the most updated document online *click here*



TECHNICAL DATA

Mod.	378-905
Actuating force (N)	20
Operating pressure (bar)	-0.9÷10
Flow rate (Nl/min)	700

Products designed for industrial applications. General terms and conditions for sale are available on www.camozzi.com.
This document contains a brief description of the products offered by Camozzi Automation at time of publication.
For more complete and up to date information about the Camozzi Automation product range, please refer to our online catalogue at https://shop.camozzi.com

Manually operated valves - Series 1,3,4

Product code: 378-905

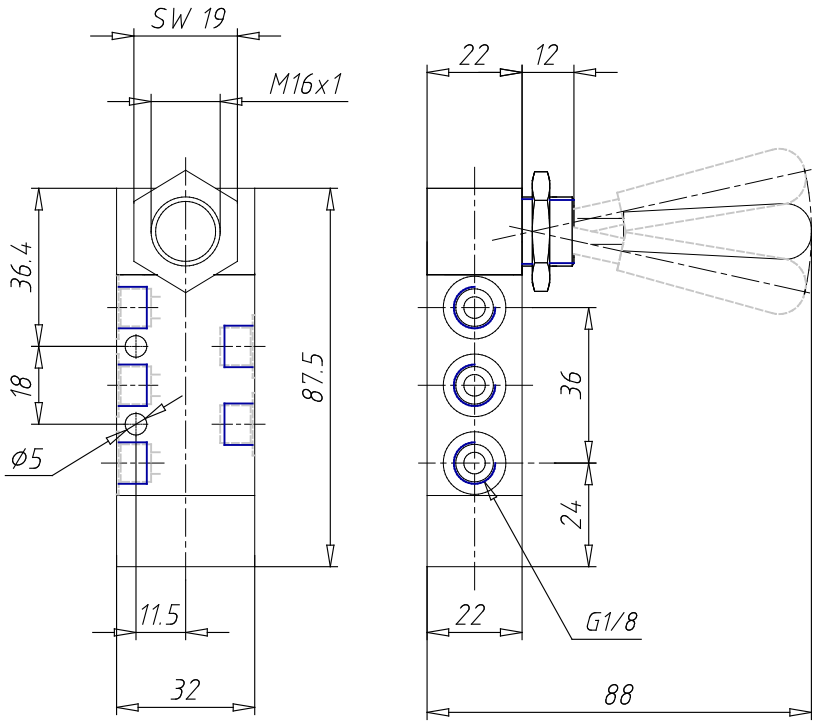

DIMENSIONS

Mod.	378-905
Actuating force (N)	20
Operating pressure (bar)	-0.9÷10
Flow rate (Nl/min)	700

Products designed for industrial applications. General terms and conditions for sale are available on www.camozzi.com.
This document contains a brief description of the products offered by Camozzi Automation at time of publication.
For more complete and up to date information about the Camozzi Automation product range, please refer to our online catalogue at https://shop.camozzi.com