E40106

Screw-in adapter for process sensors

Adapter SI/1 - 1/4NPT

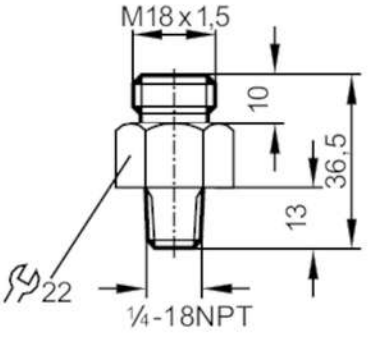

CRN

Application		
Application		for industrial applications
Media		liquids and gases
Pressure rating	[bar]	300
MAWP (for applications according to CRN)	[bar]	303
Tests / approvals		
Pressure Equipment Directive		A possible classification to PED depends on the application and has to be carried out by the user / operator.
Pressure Equipment Directive EAC		The adapter is intended for use in devices, machines and installations that do not fall under the categories of the technical rule TR CU 032/2013.
Safety instructions		The compatibility between medium and product material has to be checked in all applications.
Mechanical data		
Weight	[g]	57.6
Materials		stainless steel (1.4404 / 316L)
Sensor connection		M18 x 1,5 internal thread
Process connection		threaded connection 1/4" NPT
Insertion depth	[mm]	13.9; (measuring probe SID, SFD, TN)
Remarks		
Pack quantity		1 pcs.