Preset counters, electromechanical

Standard counters | Adding, 5 digits (AC+DC) | BVa15



The electromechanical preset counters BVa15 (with manual reset) boast a robust construction. They are ideal for use in harsh industrial environments as stand-alone counters or as plug-in variants in combination with additional B, BVa, HB or HVa counters.

Display shows actual count and preset value.

Characteristics

- 5-digit adding preset counter with stationary preset value.
- Manual reset to zero.
- Potential free changeover contact (microswitch) on reaching the preset.
- Contact switches when preset value is reached and remains switched until reset to zero.
- Counters without front bezel fit into bezel F2B and can be combined in RM 50 x 50 mm.

Benefits

- Can be combined with counters of the B, BVa, HB and HVa series using the socket boxes of the pluggable versions.
- Count value and preset constantly visible.
- Versions with transparent cover, sealing cover, zero reset key-lock.

Applications

Piece counting, automation.

Type series

Description (Reset manual)	*Type*
Without front bezel, plugs into socket box	**BVa15.01**
Front bezel 1, mounting holes	**BVa15.11**
Mounting clip	**BVa15.21**
Front bezel 3, mounting holes	**BVa15.31**

Delivery specification
Counter complete with socket box

Order information
- Art. no.
- For special voltages, please give type, voltage and series
  e.g.: BVa15.31, 12 V DC ...

Further versions, fully assembled (on request)

Counter with lockable reset

BVa15.21 vs



Counter with transparent cover

Dv BVa15.31
lockable



Dvs BVa15.31
key lockable



Type / Counting mechanism

Voltage	Type	Pulse frequency max.	Pulse on time min.	Pulse interval min.	Pulse ratio	On-time	Power consump. approx.	Permi. residual ripple max.	Operating temp. (non-condensing)
V DC	1	25 Hz	24 ms	16 ms	3 : 2	100 %	3 W	48 %	-10°C ... +60°C [+14°F ... +140°F]
V AC	a	18 Hz	27.7 ms	27.7 ms	1 : 1	100 %	3 VA	–	-10°C ... +55°C [+14°F ... +131F]

© Fritz Kübler GmbH, subject to errors and changes. 03/2023

Standard counters | Adding, 5 digits (AC+DC) | BVa15

Accessories / Mounting examples

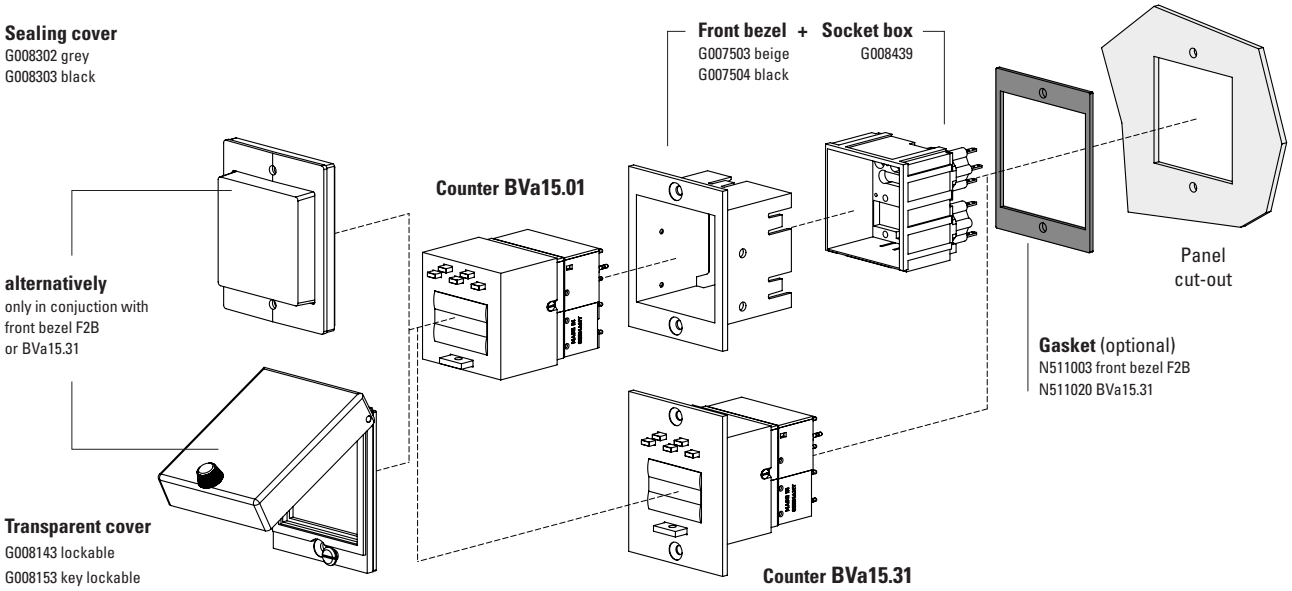

		Type / size	Description		Order no.	suitable gasket
Front bezel		**F2B**	for counter BVa15.01 for cut-out 54 x 49 mm (only in conjuction with socket box G008439)	beige black	**G007503** **G007504**	**N511003**
Socket box		**946.1**	for plug-in connection in front bezel F2B	black	**G008439**	–
Sealing cover IP65		**K2**	for counter BVa15.31 or for counter BVa15.01 in conjuction with front bezel F2B	transp. /grau transp. /black	**G008302** **G008303**	–
Transparent cover IP65 with gasket		**2 Dv**	cover lockable for counter BVa15.31 or for counter BVa15.01 in conjuction with front bezel F2B	transp. /black	**G008143**	–
		2 Dvs	cover key lockable for counter BVa15.31 or for counter BVa15.01 in conjuction with front bezel F2B	transp. /black	**G008153**	–
Gasket counter			58 x 58 mm [2.28 x 2.28“] 60 x 75 mm [2.36 x 2.95“]	BVa15.21 BVa15.31	**N511004** **N511020**	
Mounting frame		**cut-out 50 x 25 mm [1.97 x 0.98“]**	for snap-on mounting on 35 mm [1.38“] top-hat DIN rail, for BVa15.21	chromated	**G300003**	
DIN rail mount		**SR 3**	for snap-on mounting on 35 mm [1.38“] top-hat DIN rail		**G300002**	
Key for key-locking zero reset					**G050265**	

© Fritz Kübler GmbH, subject to errors and changes. 03/2023

Standard counters | Adding, 5 digits (AC+DC) | BVa15

Technical data

Electrical connection	counter	tinned tabs ø 1.6 mm [0.063"] with push-on connectors
	socket box	tinned plated tabs 0.8 x 2.8 mm [0.032 x 0.11"]
Rated voltages	counting mechanism	12 / 24 / 48 / 115 V DC ±10 % 24 / 48 / 115 / 230 V AC ±10 %
Height of figures	counter	4.5 mm [0.18"]
	preset	4 mm [0.16"]
Color of housing	grey	Art. no. x.xxx.xx**0**.xxx
	black	Art. no. x.xxx.xx**1**.xxx
Color of figures	counter	white on black
	preset	yellow on black
Counting mechanism shaft		stainless steel
Mounting position		any
Service life		approx. 100 x 10^6 pulses
Protection		IP40 (front side)
Weight		approx. 130 g [4.59 oz]
Device safety	designed to	EN 61010 part 1
	protection class	2
	application area	pollution level 2
Test voltage		2000 V, effective
Switching contact		1 change over contact (micro switch), release in 2nd half-step on the preset number

Loading (max) (with resistive Load.)

AC	250 V AC	2.0 A
DC	24 V DC	2.0 A
	60 V DC	0.7 A
	115 V DC	0.4 A
	230 V DC	0.2 A

Suitable spark quenching is required with inductive load, reducing the max. current to 60 %

Options

Key-locking zero reset	
housing grey	Art. no.: 2.1X0.XX6.XXX
housing black	Art. no.: 2.1X0.XX7.XXX
Lockable transparent cover (IP65)	Dv BVa counter with front bezel 3 Art. no.: 2.1X0.7XX.XXX
Key lockable transparent cover (IP65)	Dvs BVa counter with front bezel 3 Art. no.: 2.1X0.8XX.XXX
Flexible sealing cover K2 (IP54)	K2 BVa counter with front bezel 3 Art. no.: 2.1X0.6XX.XXX
Screw terminal connection	Art. no.: 2.XXX.XXX.XXX.023
Flat pin connection 2.8 x 0.8 mm (on request)	Art. no.: 2.XX7.XXX.XXX

Approvals

CE compliant in accordance with	
EMC Directive	2014/30/EU
RoHS Directive	2011/65/EU
Low Voltage Directive	2014/35/EU
UKCA compliant in accordance with	
EMC Regulations	S.I. 2016/1091
RoHS Regulations	S.I. 2012/3032
Low Voltage Regulations	S.I. 2016/1101

Connection diagrams

DC

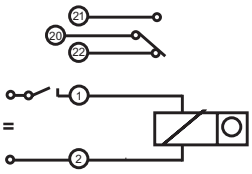

AC

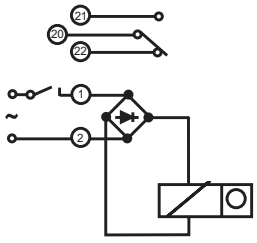

© Fritz Kübler GmbH, subject to errors and changes. 03/2023

Standard counters | Adding, 5 digits (AC+DC) | BVa15

Without front bezel,
plugs into socket box type 946.1

Type BVa15.01



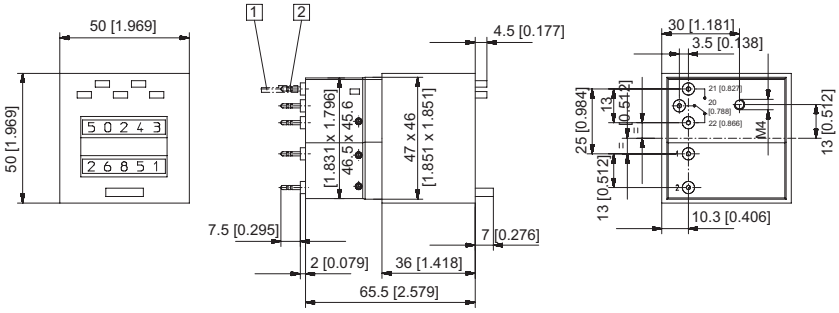

1 Push-on connector ø 1.5 [0.059] tinned 2 Round pin ø 1.6 [0.063] tinned
Color of housing grey (standard)

Type	Voltage	Display	Art. no. 24 V	115 V	230 V	
BVa15.01	DC (25 Hz)	5 digits	**2.100.010.033**	–	–	
	AC (18 Hz)		**2.100.010.061**	**2.100.010.064**	**2.100.010.066**	
Color of housing black: Art. no. 2.1X0.01**1**.XXX						

Front bezel 1,
with mounting holes

Type BVa15.11



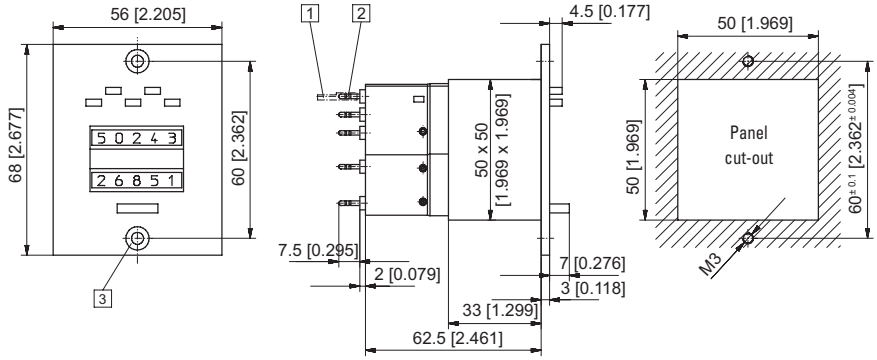

1 Push-on connector ø 1.5 [0.059] tinned 2 Round pin ø 1.6 [0.063] tinned 3 Countersinking Af3 DIN 74
Color of housing grey (standard)

Type	Voltage	Display	Art. no. 24 V	115 V	230 V	
BVa15.11	DC (25 Hz)	5 digits	**2.100.110.033**	–	–	
	AC (18 Hz)		**2.100.110.061**	**2.100.110.064**	**2.100.110.066**	
Color of housing black: Art. no. 2.1X0.11**1**.XXX						

Dimensions in mm [inch]

© Fritz Kübler GmbH, subject to errors and changes. 03/2023

Standard counters | Adding, 5 digits (AC+DC) | BVa15

With mounting clips
Type BVa15.21



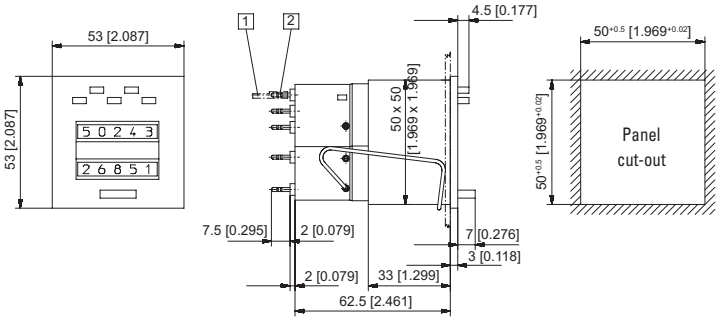

1 Push-on connector ø 1.5 [0.059] tinned 2 Round pin ø 1.6 [0.063] tinned
Color of housing grey (standard)

Type	Voltage	Display	Art. no. 24 V	115 V	230 V	
BVa15.21	DC (25 Hz)	5 digits	**2.100.210.033** 1)	–	–	
	AC (18 Hz)		**2.100.210.061**	**2.100.210.064**	**2.100.210.066** 1)	
Color of housing black: Art. no. 2.1X0.21**1**.XXX			Further stock types: Art. no. 2.100.211.033			

Front bezel 3, with mounting holes
Type BVa15.31



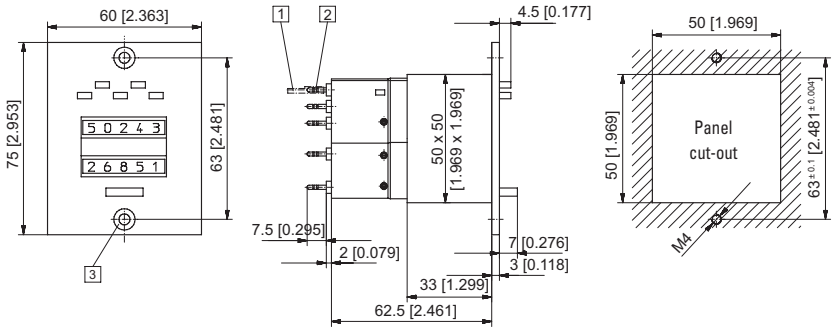

1 Push-on connector ø 1.5 [0.059] tinned 2 Round pin ø 1.6 [0.063] tinned 3 Countersinking Af3 DIN 74
Color of housing grey (standard)

Type	Voltage	Display	Art. no. 24 V	115 V	230 V	
BVa15.31	DC (25 Hz)	5 digits	**2.100.310.033**	–	–	
	AC (18 Hz)		**2.100.310.061**	**2.100.310.064**	**2.100.310.066**	
Color of housing black: Art. no. 2.1X0.31**1**.XXX			Further stock types: BVa15.31.4sw 24 V DC / Art. no. 2.107.311.013			

Dimensions in mm [inch]

1) Stock types

© Fritz Kübler GmbH, subject to errors and changes. 03/2023