Accessories for Fieldbus Systems
Wall/panel feed-through
FKM-FS57-M12

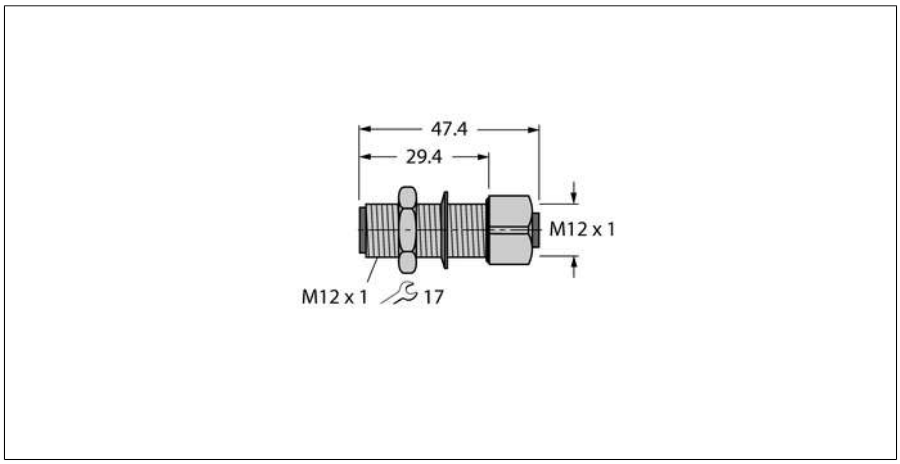

- **Type: M12 adapter**
- **5-pin feedthrough male/female connector**
- **For use in CAN (DeviceNet™, CANopen) applications**
- **Ampacity: 4 A**
- **Rated voltage: 150 V**
- **Temperature range: -40 °C…+105 °C**
- **Protection class: NEMA 1, 3, 4, 6P and IEC IP67**

Type designation	FKM-FS57-M12
Ident-No.	6602223
Ident-No (TUSA)	U1136

Connector A side	Wall feedthrough/Female receptacle, M12x1, Straight
Number of pins	5
Contacts	brass, CuZn, Gold-plated
Contact carriers	Plastic, TPU, Blue
Grip	Brass, CuZn, Nickel-plated
Mounting Thread A	M12x1
Mechanical lifespan	> 100 Mating cycles
Pollution degree	3
Protection class	IP67, (screwed together)

Connector B side	Male receptacle

Rated voltage	150 V
Current	4 A
Insulation resistance	≥ 10^8 Ω
Forward resistance	≤ 5 mΩ

Ambient temperature	
Stationary	-40…+105°C

Pin Assignment

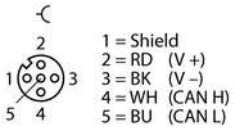

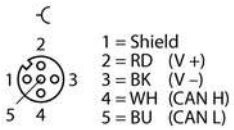

Circuit Diagram

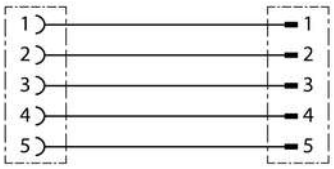

Edition • Rev. C • 2017-09-15T07:35:47+02:00