Air preparation unit, 2-part, Series AS3-ACD

- G 3/8 G 1/2
- filter porosity 5 µm
- lockable
- for padlocks
- with pressure gauge
- suitable for ATEX



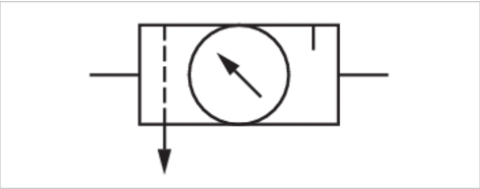

Type	2-part, Can be assembled into blocks
Parts	Filter pressure regulator, Lubricator
Mounting orientation	vertical
Certificates	suitable for ATEX
Working pressure min./max.	See table below
Ambient temperature min./max.	-10 ... 50 °C
Medium temperature min./max.	-10 ... 50 °C
Medium	Compressed air Neutral gases
Nominal flow Qn	3500 l/min
Regulator type	Diaphragm-type pressure regulator
Regulator function	with relieving air exhaust
Adjustment range min./max.	0,5 ... 8 bar
Pressure supply	single
Filter reservoir volume	49 cm³
Filter element	exchangeable
Lubricator reservoir volume	80 cm³
Type of filling	Semi-automatic oil filling during operation Manual oil filling
Weight	See table below

Technical data

Part No.	Port	filter porosity	Flow	Working pressure min./max.
			Qn	
R412007298	G 3/8	5 µm	3500 l/min	1,5 ... 16 bar
R412007299	G 3/8	5 µm	3500 l/min	1,5 ... 16 bar
R412007307	G 1/2	5 µm	3500 l/min	1,5 ... 16 bar
R412007308	G 1/2	5 µm	3500 l/min	1,5 ... 16 bar
R412007309	G 1/2	5 µm	3500 l/min	1,5 ... 16 bar
R412007313	G 1/2	5 µm	3500 l/min	1,5 ... 16 bar
R412007314	G 1/2	5 µm	3500 l/min	1,6 ... 16 bar
R412007315	G 1/2	5 µm	3500 l/min	1,5 ... 16 bar

Part No.	Condensate drain	Pressure gauge	Reservoir
R412007298	semi-automatic, open without pressure	with pressure gauge	Polycarbonate
R412007299	fully automatic, open without pressure	with pressure gauge	Polycarbonate
R412007307	semi-automatic, open without pressure	with pressure gauge	Polycarbonate
R412007308	fully automatic, open without pressure	with pressure gauge	Polycarbonate
R412007309	fully automatic, closed without pressure	with pressure gauge	Polycarbonate

Part No.	Condensate drain	Pressure gauge	Reservoir
R412007313	semi-automatic, open without pressure	with pressure gauge	Die cast zinc
R412007314	fully automatic, open without pressure	with pressure gauge	Die cast zinc
R412007315	fully automatic, closed without pressure	with pressure gauge	Die cast zinc

Part No.	Weight
R412007298	1,02 kg
R412007299	1,07 kg
R412007307	1,02 kg
R412007308	1,07 kg
R412007309	1,07 kg
R412007313	1,83 kg
R412007314	1,87 kg
R412007315	1,75 kg

Nominal flow Qn with secondary pressure p2 = 6 bar at Δp = 1 bar

Suitable for use in Ex zones 1, 2, 21, 22.

Technical information

The pressure dew point must be at least 15 °C under ambient and medium temperature and may not exceed 3 °C .
Note: Polycarbonate reservoirs are susceptible to solvents, supplementary information can be found at "Customer information".
Suitable for use in Ex zones 1, 2, 21, 22.
A change in the flow direction (from air supply on the left to air supply on the right) occurs by rotating installation by 180° about the vertical axis. Please see the operating instructions for further details.
Also suitable for separation of fluid oil or water due to the design.

Max. achievable compressed air class acc. to ISO 8573-1:2010 6 : 7 : -

Technical information

Material	
Housing	Polyamide
Front plate	Acrylonitrile butadiene styrene
Seals	Acrylonitrile butadiene rubber
Threaded bushing	Die cast zinc
Reservoir	Polycarbonate Die cast zinc
Protective guard	Polyamide
Filter insert	Polyethylene

Dimensions

Dimensions

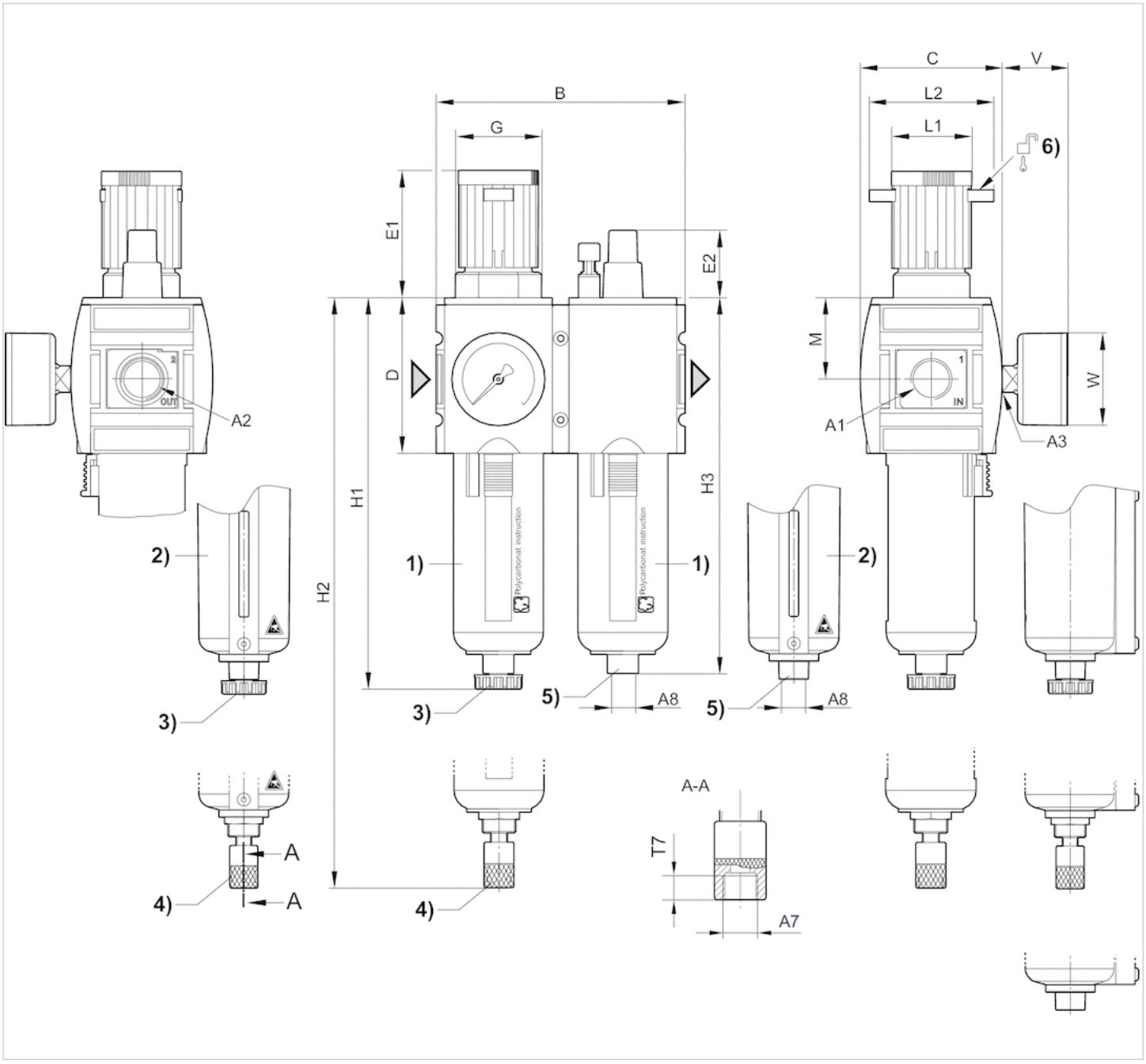

A1 = input
A2 = output
A3 = pressure gauge connection
A7 = condensate drain
1) Plastic reservoir and protective guard with window
2) Metal reservoir with level indicator
3) Semi-automatic condensate drain
4) Fully automatic condensate drain
5) Port for semi-automatic oil filling 6) Mounting option for padlocks, max. shackle Ø 8

Dimensions in mm

A1	A2	A3	A7	A8	B	C	D	E1	E2	G	H1	H2	H3	M	L1	L2	T7	V	W
G 3/8	G 3/8	G 1/4	G 1/8	G 1/8	126	74	80	63.5	27.5	M42x1,5	189.5	206	183	42.5	41	60	8.5	33	50
G 1/2	G 1/2	G 1/4	G 1/8	G 1/8	126	74	80	63.5	27.5	M42x1,5	189.5	206	183	42.5	41	60	8.5	33	50

Diagrams

Lubricator activation margin

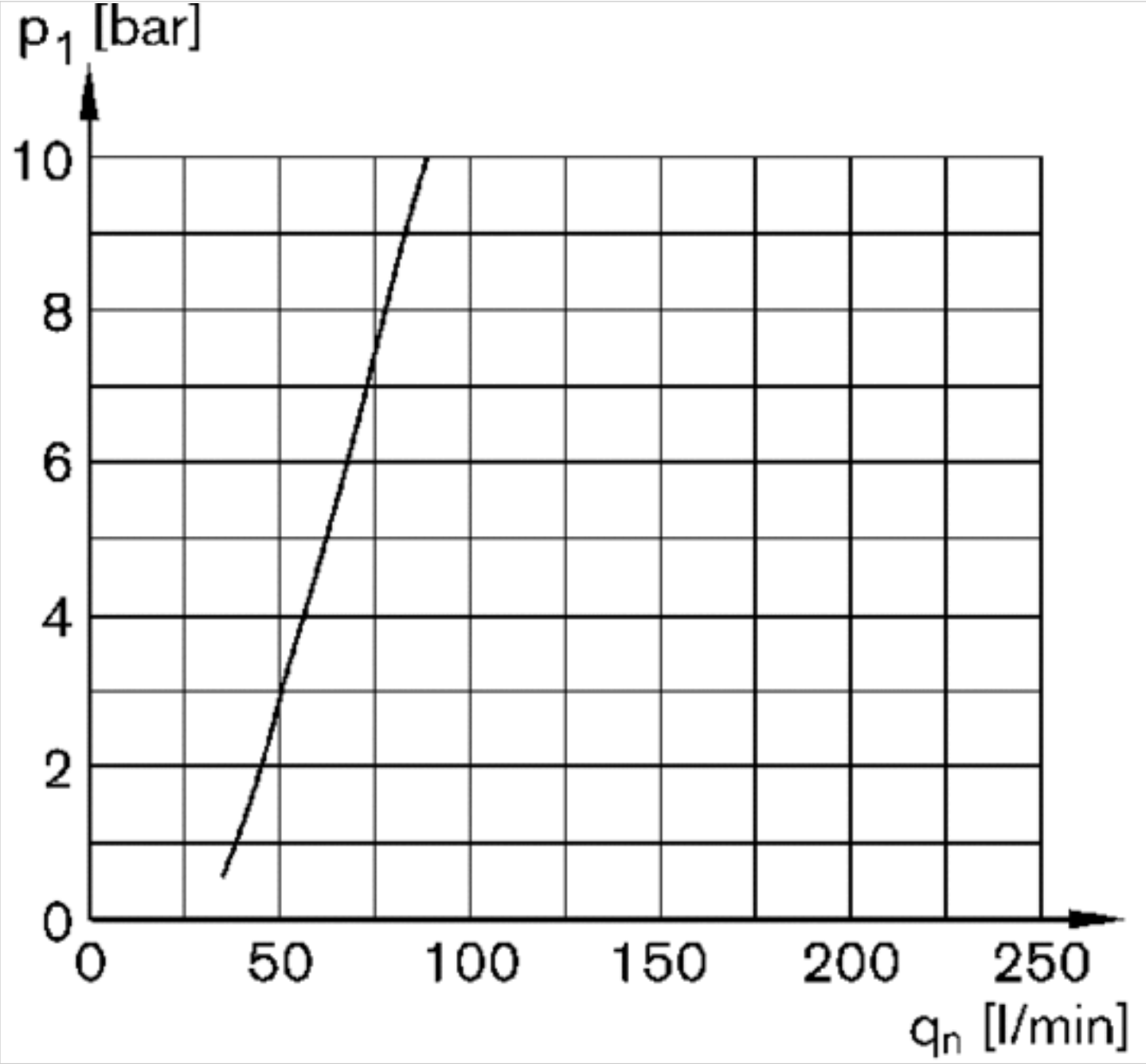

p1 = working pressure
qn = nominal flow

Flow rate characteristic (p2: 0,5 - 8 bar)

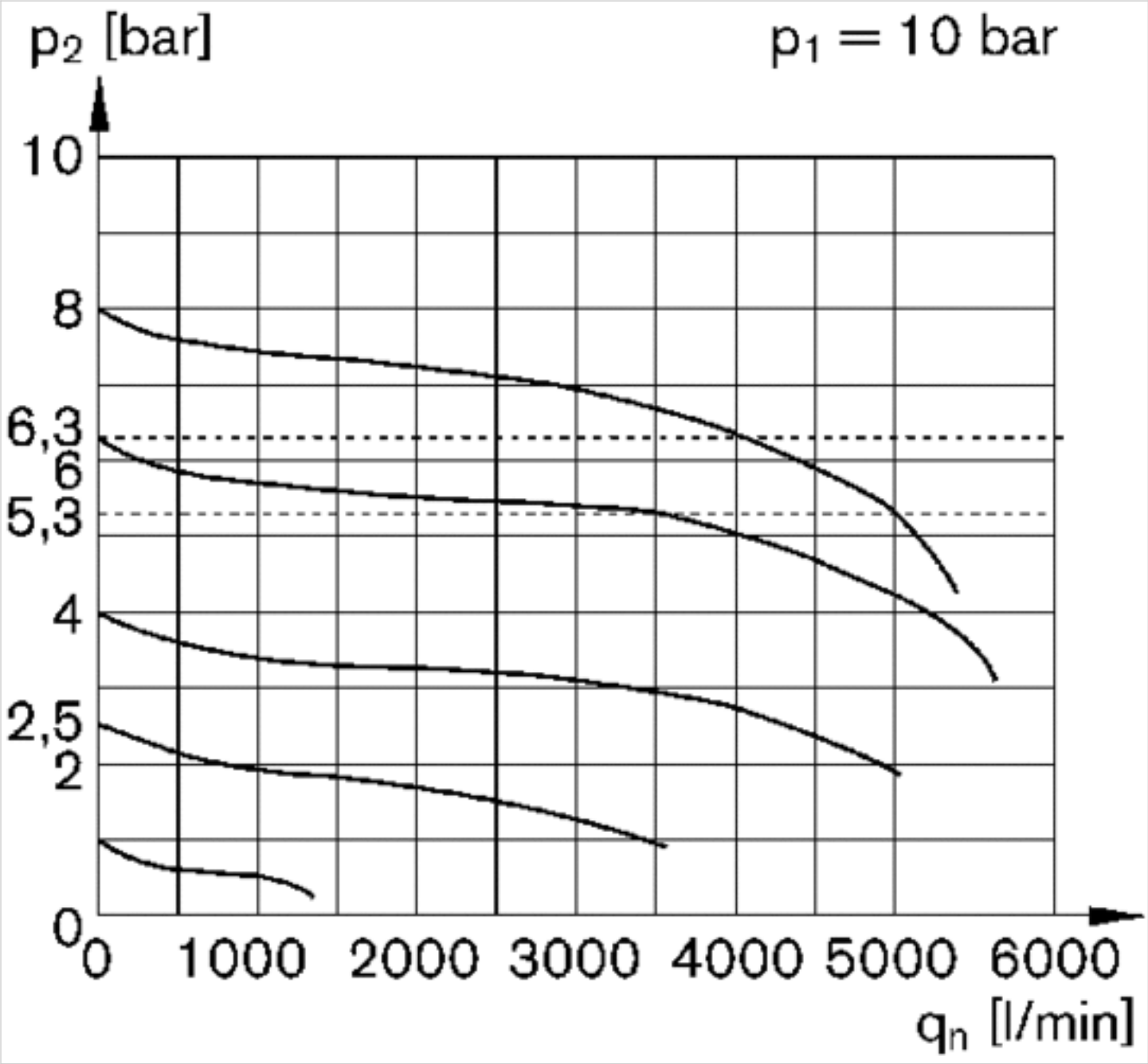

p1 = Working pressure
p2 = Secondary pressure
qn = Nominal flow

Accessories overview

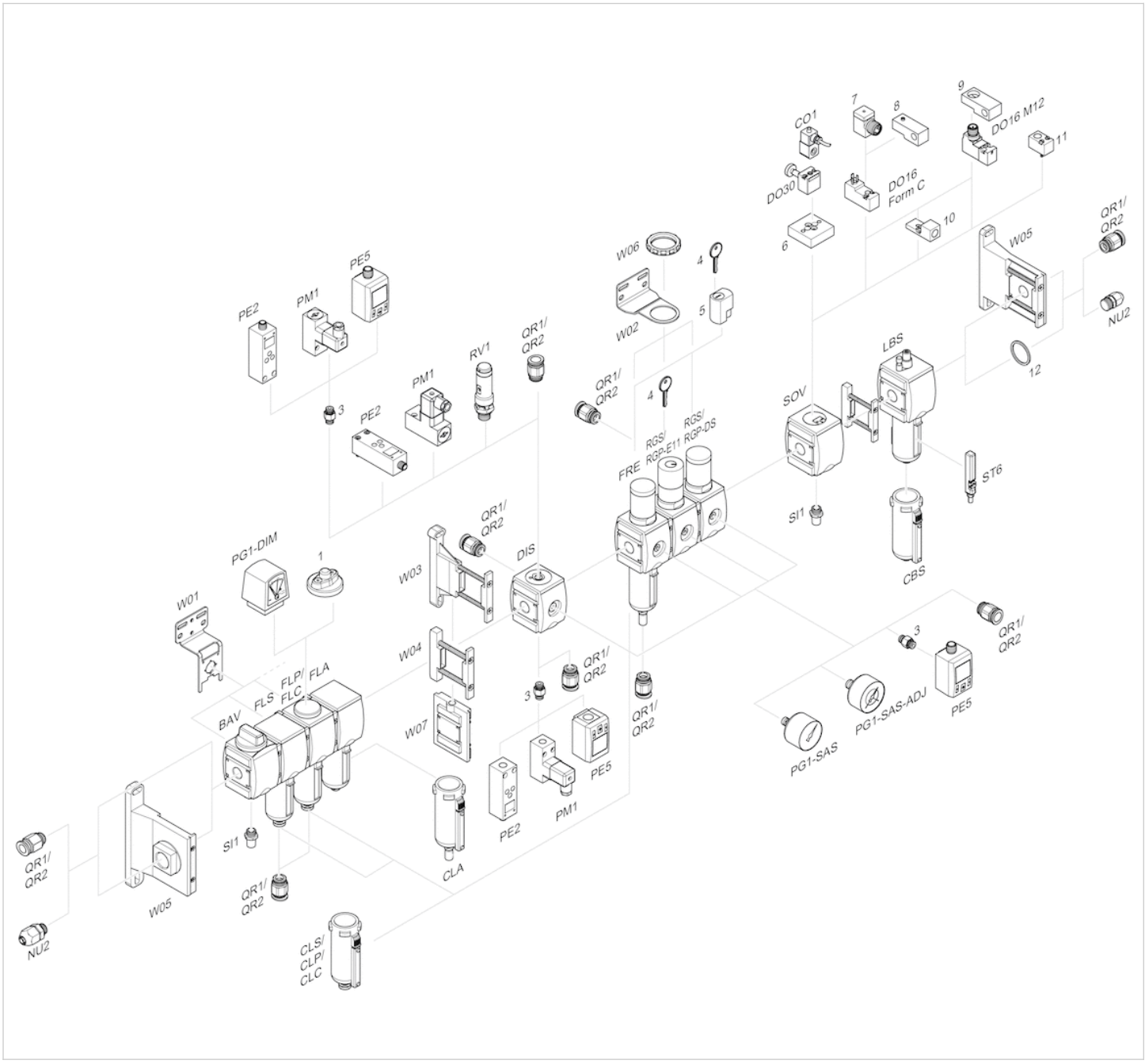

1 = contamination display
3 = Double nipple
4 = Key for E11 locking
5 = mortise lock
6 = Transition plate DO30
7 = Adapter, Series CON-VP
8 = Mounting aid DO16, form C
9 = Mounting aid DO16, M12
10 = Adapter for external pilot air
11 = Adapter pneumatic operation
12 = Sealing ring