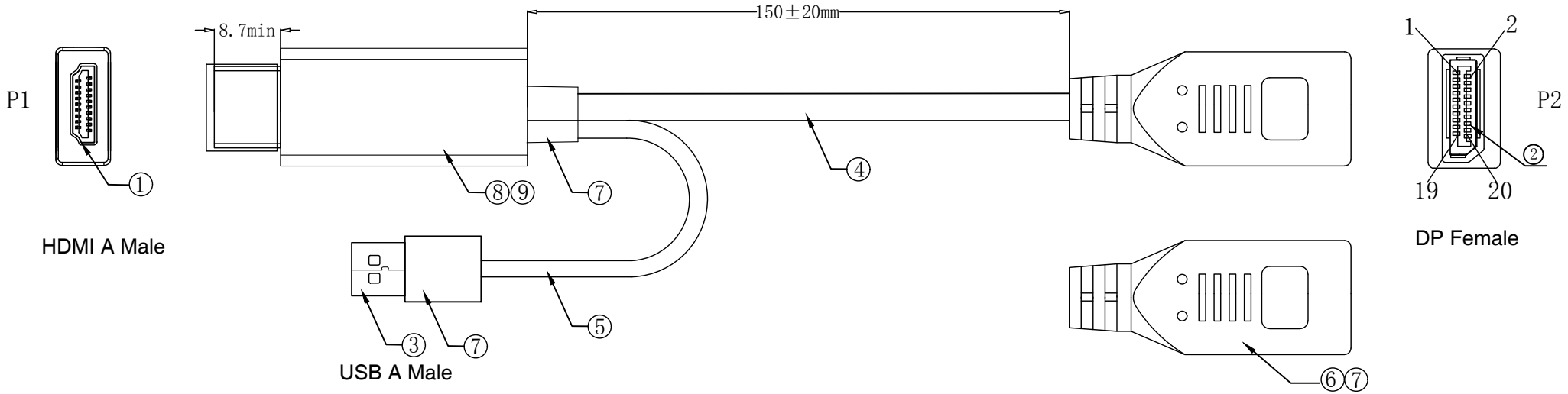

NOTE:

1. Computer + Monitor test (HDMI INPUT, DP Female OUTPUT)(DVD not applicable)

(1). Resolution:3840*2160@60Hz

2. RoHS and REACH Compliant

MATERIAL LIST:

NO.	PARTS. NAME	SPECIFICATION STANDARD	QT'Y	REMARK
⑩	DUST CAP	LD-PE	1	
⑨	PCBA	HDMI TO DP PCBA	1	
⑧	HOUSING	ABS BLACK	1	
⑦	OUTER MOLDING	PVC BLACK	3	
⑥	INNER MOLDING	LD-PE	2	
⑤	CABLE 2	USB Cable (0.12*12)*2C JACKET PVC Black OD=3.0 L=300±20mm	1	
④	CABLE 1	30AWG(30AWG TC*1P+D+AL+MY)*5C+30AWG TC*5C+ADB+Jacket:PVC/Black OD:6.0±0.2mm	1	
③	USB CONNECTOR	USB A male Solder Type, The Pin Gold Plating, the shell for Nickel Plating	1	
②	DP CONNECTOR	DP Female Connector , The Pin Gold Plating, the shell for Nickel Plating	1	
①	HDMI CONNECTOR	19P A/M connector Solder Type, The Pin Gold Plating, the shell for Gold Plating	1	

ITEM NO	LENGTH(mm)
12.03.3147	150±20

DESC. ROLINE Cableadapter HDMI -> DP, v1.2, 4K@60Hz, black, 0.15m

BY	CHK	REVISION RECORD MODIFICATIONS	DATE	REV.
		NEW	2021-05-10	V0

SECOMP