HALL EFFECT PUSHBUTTON SWITCHES

OPERATES 10 MILLION CYCLES, CONTACTLESS SWITCHING

Designated the HP7 series, these new momentary pushbutton switches utilize Hall Effect sensor technology for long life contactless switching, with 10 million operations. Available in dusttight and moistureproof sealed configurations, these switches can also be watertight sealed to IP68. The stylish dome shaped pushbuttons are available in a choice of nine colors.

Case and bezel are precision machined aluminum alloy, available with either a black or clear coat anodized finish. Three case and button styles are offered in raised domed, flush dome, and exposed dome styles. PC pins and wire leads are standard, with value-added connectors available to specification.

This rugged switch is designed to withstand harsh environments while being subjected to high rates of actuation. Applications that require repeated "jogging" and other continuous operations from positioning switches are prime applications for the HP7 Hall Effect switch. Examples of such can be found in material handling equipment such as loaders, lift trucks, bucket and shovel and other applications where positioning of the load is critical.



Quality Features:

- **10 million cycles**
- **Hall Effect sensor technology for long life**
- **Moistureproof and dusttight to IP64 & M8805 Design 2 or watertight to IP68**
- **Stylish dome shaped buttons in nine colors**
- **Momentary action**
- **Choice of termination**
- **Mechanical detent available for tactile feedback**

Standard Characteristics/Ratings:	
OPERATIONAL:	
Mechanical Life:	10,000,000 cycles
Seal Options:	Dusttight and moistureproof or watertight to IP68
Temperature Range:	-40°C to +85°C
Operating Force:	1 ±0.5 lbs.
Total Travel:	0.080 max.
Overtravel:	0.010 min.
MATERIALS:	
Button:	Nylon, choice of colors
Case:	Black anodized aluminum alloy or clear
Terminations:	PC Pins or Wire Leads
ELECTRICAL:	
Supply Voltage:	4.5V to 24V Typical
Output Voltage:	• Open Collector • Max. Current 20 mA • Max. Off Voltage 28V • Output Saturation Voltage 400MV max. @ 20 mA Typical
Supply Current:	8 mA max.
Reverse Output Voltage:	0.5V max.
Reverse Voltage Protection:	-18V max.
Electrical Life:	10,000,000 cycles

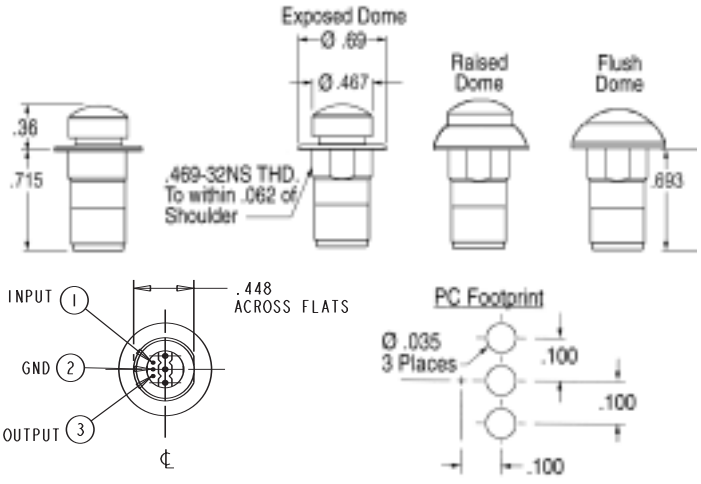

HP7 PART NUMBER CODE

HP7- X X X X X X

Dome Style	Action	Terminal Style	Seal Level	Case Color	Button Color
DF. Flush Dome	**1.** Normally High Momentary	**3.** 3 Pin Header	**2.** Dusttight & Moistureproof	**1.** Clear	**1.** Red
DR. Raised Dome	**2.** Normally High Momentary With Detent	**5.** 18" Potted Wire Leads	**3.** Watertight	**2.** Black	**2.** Black
DE. Exposed Dome	**3.** Normally Low Momentary				**3.** Orange
	4. Normally Low Momentary With Detent				**4.** Yellow
					5. Green
					6. Blue
					7. Purple
					8. Grey
					9. White

Specifications Subject To Change Without Notice