Brand of NTN corporation

Technical data

ESFL209

Bearing units



Grey cast housing, radial insert ball bearing with eccentric locking collar, single lip seal

KIT CONTENT

ES209G2, FL209

VISUAL (S)

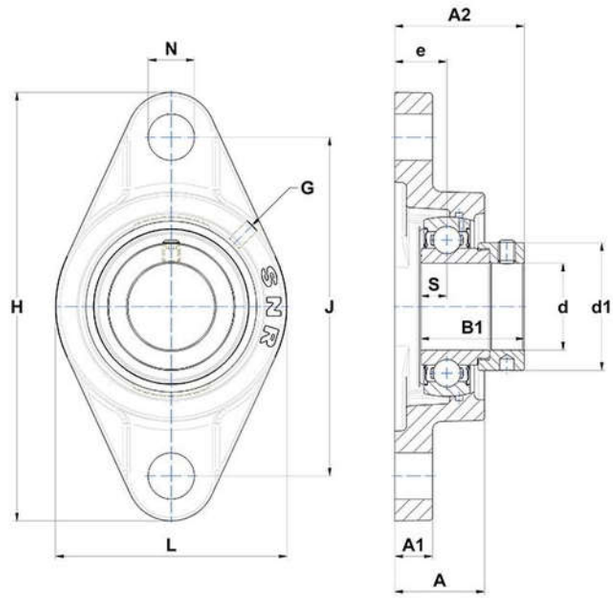

PRODUCT DEFINITION

Brand	SNR
A - Housing height	38 mm
A1 - Housing foot height / flange height	16 mm
A2 - Total height from mounting surface	54,7 mm
B - Width of Inner Ring	30,2 mm
B1 - Overall width Inner Ring	43,7 mm

NTN Europe
1 rue des Usines · BP 2017 · 74010 Annecy Cedex · France · Tel. +33 (0)4 50 65 30 00
S.A. au capital de 322 639 919 € · RCS ANNECY B 325 821 072 · Id. Fiscale : FR 48 325 821 072
SIRET 325 821 072 00015 · Code APE 2815 Z · Code NACE 28.15

ESFL209
Bearing units

PRODUCT DEFINITION	
d - Shaft diameter	45 mm
d1 - Outer dia of eccent. Lock. collar / nut of adapter sleeve	62 mm
e - Distance mounting surface to bearing center	22 mm
G - Grease fitting	M6x1
H - Housing length, width or diameter	188 mm
J - Mounting holes distance	148 mm
L - Housing width / diameter	108 mm
N - Mounting hole dimension	19 mm
S - Distance front side/bearing centre	11 mm

PRODUCT PERFORMANCE	
C - Dynamic load rating	31850000 mN
C0 - Static load rating	20800000 mN
Operating temperature min.	253,15 °K
Operating temperature max.	373,15 °K

OTHER FEATURES	
Mass	1,86 kg
Recommended tightening torque for set screw	11.5 N-m