IEC	95 - 300 mm² (Al / Cu) 14 Nm		95 - 185 mm² (Cu) 14 Nm	95 - 240 mm² (Cu) 20 Nm
UL	AWG 4/0 - MCM 600 75° C copper 146 lb-in		-	-
	30 - 40 mm			

IEC	6 x 15,5 x 0,8 - 10 x 32 x 1 (Cu) 14 Nm		
UL	6 x 15,5 x 0,8 - 10 x 32 x 1 75° C copper 146 lb-in	-	-
	50 mm	50 mm	55 mm

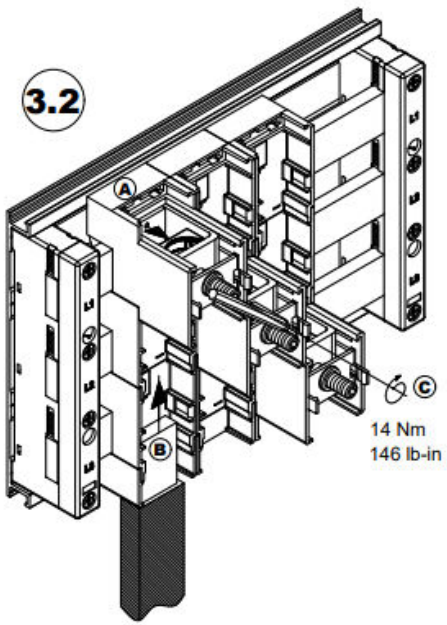

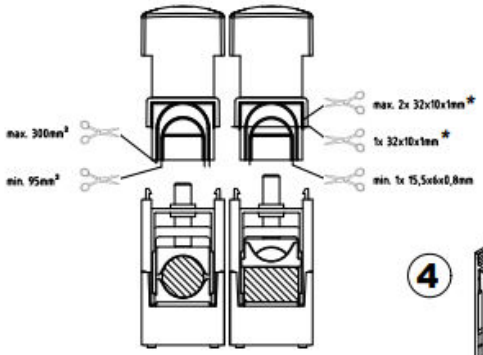

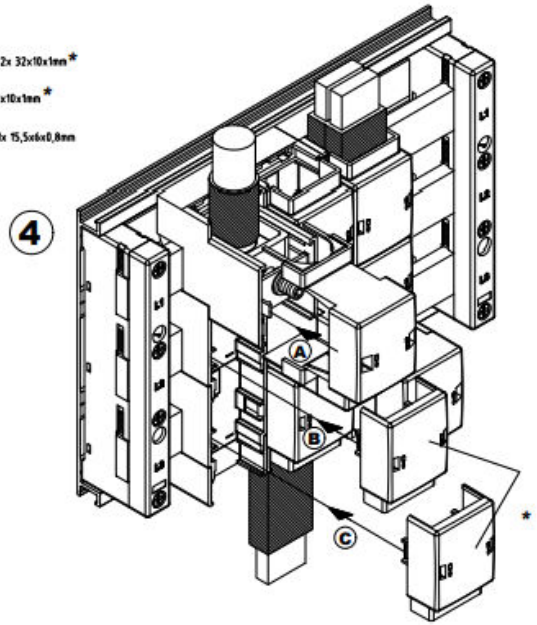

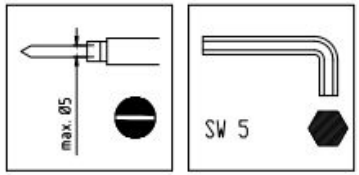

*entfällt; not applicable; pas applicate

For further information: www.rittal.com

RITTAL

SV 9342.310

Raum für Verpackungsdatum
Area for date of packing
(MMJJTT / MMYYDD)

CE

1 SV Anschlussadapter 800A, 3-polig
60 mm Schienenmittenabstand

1 SV Connection adaptor 800A, 3-pole
60 mm busbar centre distance

1 Adaptateur pour raccordements SV 800A, 3-pôles
60 mm d'écartement entre les axes des barres

Article No.	SV9342.310	
Suitable for use on a circuit capable of delivering not more than SCCR symmetrical amperes [kA]	Maximum voltage AC [V]	Maximum condition when protected by
65	600	Class L 800A Fuses
	480	Circuit breaker (UL category DIVQ/7) rated up to 600A, having an interrupting rating not less than 65kA symmetrical amperes

Zchng.-Nr. / No. of dwg. : A3735607SV
Versandbeutel-Nr. / No. of accessory bag : -

Lieferanten-Nr. / No. of supplier :

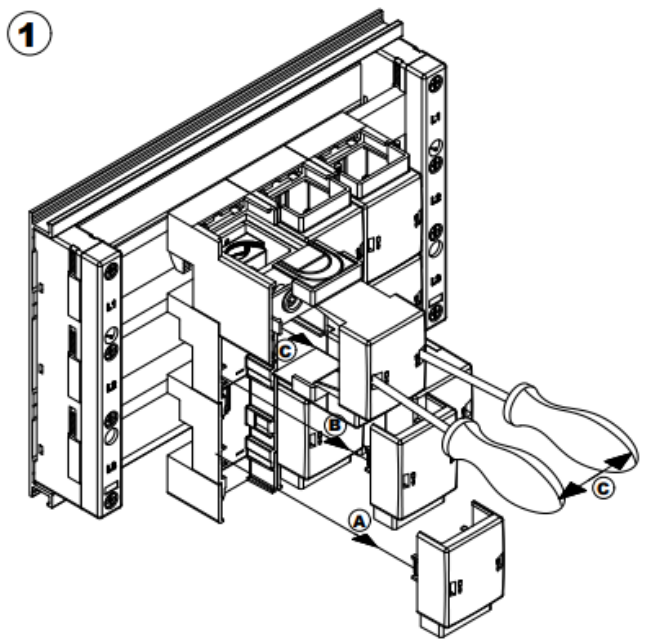
1
A
B
C

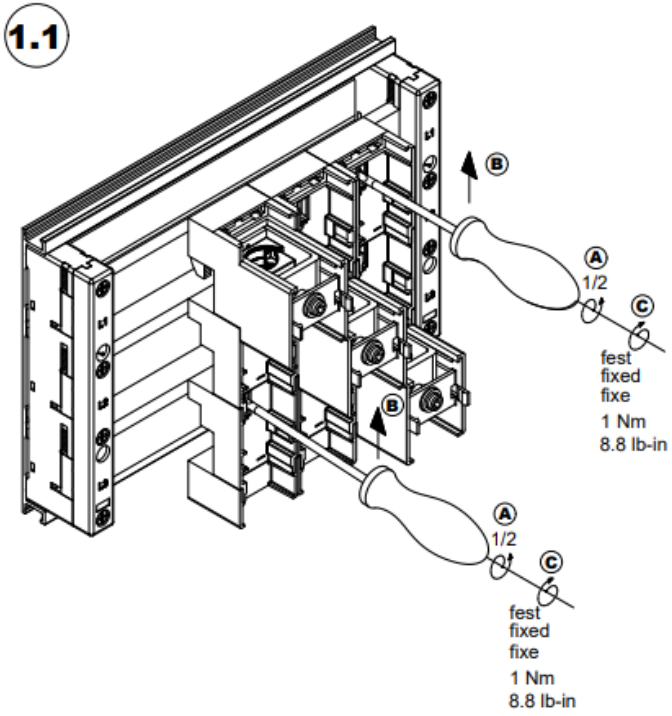
1.1
A
1/2
C
fest
fixed
fixe
1 Nm
8.8 lb-in
B
A
1/2
C
fest
fixed
fixe
1 Nm
8.8 lb-in

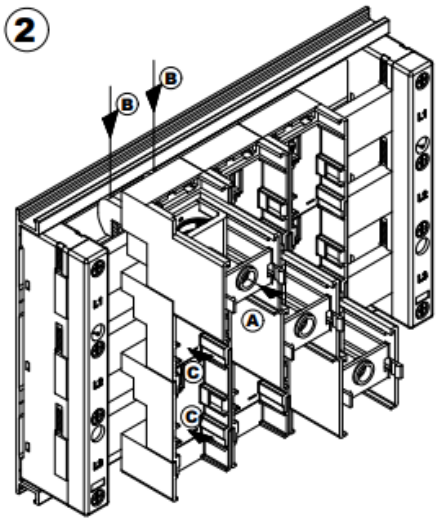
2
B
B
A
C
C

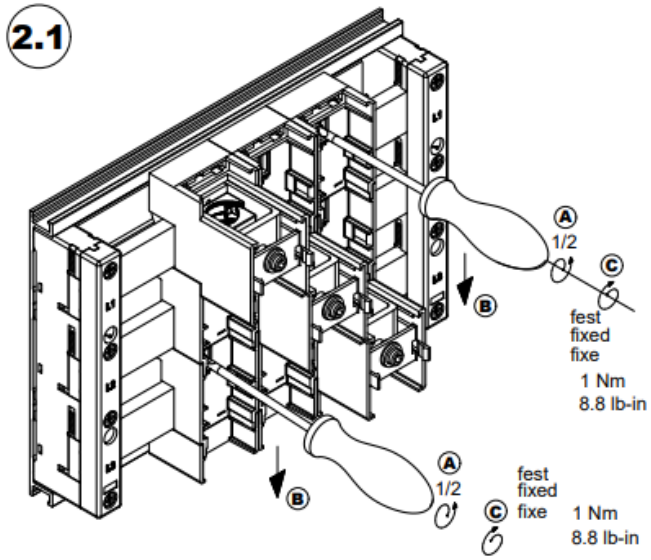
2.1
A
1/2
C
fest
fixed
fixe
1 Nm
8.8 lb-in
B
A
1/2
C
fest
fixed
fixe
1 Nm
8.8 lb-in

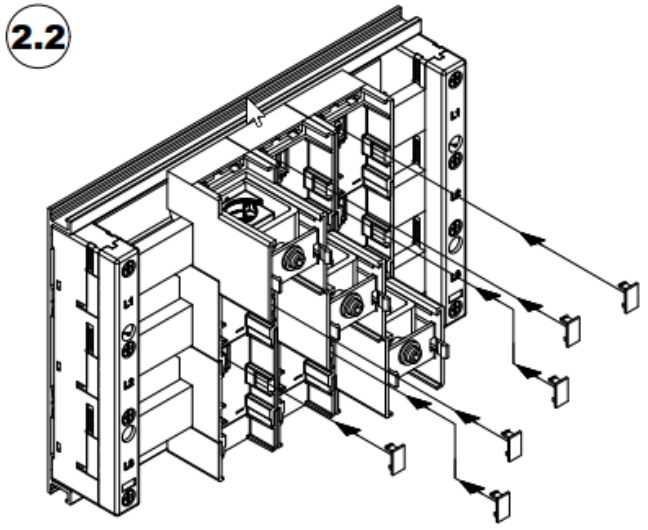
2.2

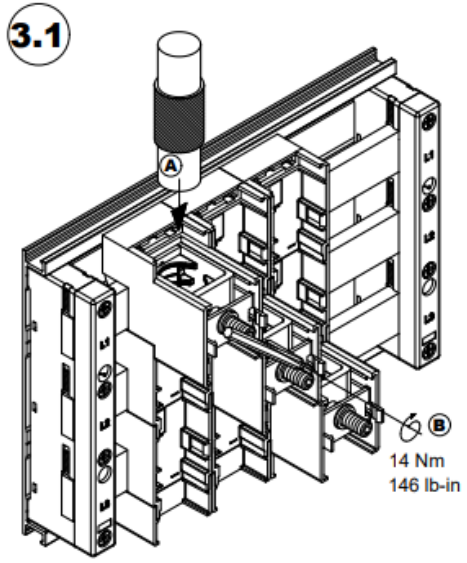
3.1
A
B
14 Nm
146 lb-in