OA5209

Diffuse reflection sensor

OAT-FCKG/T

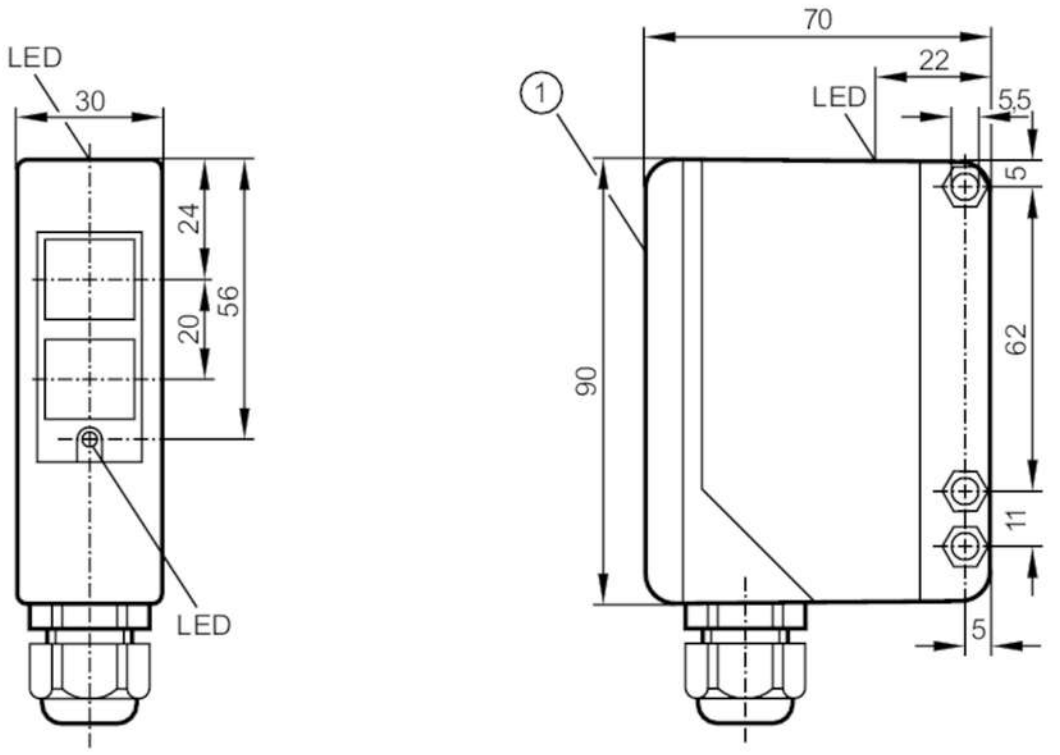

1 selection switch and potentiometer under cover
receiver in upper lens
transmitter in lower lens

Product characteristics		
Type of light		infrared light
Housing		rectangular
Application		
Special feature		Function check output
Function principle		Diffuse reflection sensor
Electrical data		
Operating voltage	[V]	10...36 DC
Current consumption	[mA]	< 50
Protection class		II
Reverse polarity protection		yes
Type of light		infrared light
Wave length	[nm]	875
Outputs		
Electrical design		PNP/NPN
Output function		light-on/dark-on mode; (programmable)
Function check output		yes
Max. current load for function check output	[mA]	10

OA5209

Diffuse reflection sensor

OAT-FCKG/T

Permanent current rating of switching output DC	[mA]	250	
Max. current load in dual output mode	[mA]	100	
Switching frequency DC	[Hz]	300	
Short-circuit protection		yes	
Type of short-circuit protection		pulsed	
Overload protection		yes	
Time function	[s]	0.5...10	
Detection zone			
Range	[mm]	5...2750; (white paper 300 x 300 mm)	
Range adjustable		yes	
Operating conditions			
Ambient temperature	[°C]	-25...60	
Protection		IP 65	
Tests / approvals			
EMC		EN 60947-5-2	
		EN 55011	class B
MTTF	[years]	357	
Mechanical data			
Weight	[g]	291	
Housing		rectangular	
Dimensions	[mm]	90 x 30 x 70	
Materials		PPO modified	
Lens material		PMMA	
Lens alignment		side lens	
Displays / operating elements			
Display		switching status	1 x LED, yellow
		operation	1 x LED, green
		function	1 x LED, red
Operating elements			on-delay or off-delay selectable via slide switch
Accessories			
Items supplied		Angle bracket: 1, E20514	
		screwdrivers	
Remarks			
Pack quantity		1 pcs.	

OA5209

Diffuse reflection sensor

OAT-FCKG/T

Electrical connection

terminals: ...1.5 mm²; Cable gland: M16 X 1.5

Connection

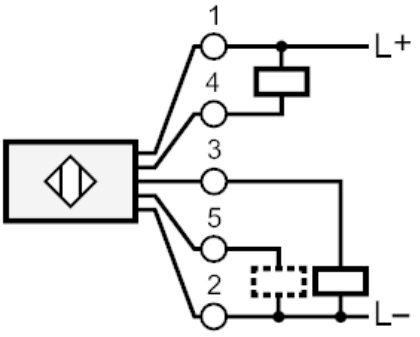

5	Function check output