Brand of NTN corporation

Technical data

ESP207

Bearing units



Grey cast housing, radial insert ball bearing with eccentric locking collar, single lip seal

KIT CONTENT

ES207G2, P207

VISUAL (S)

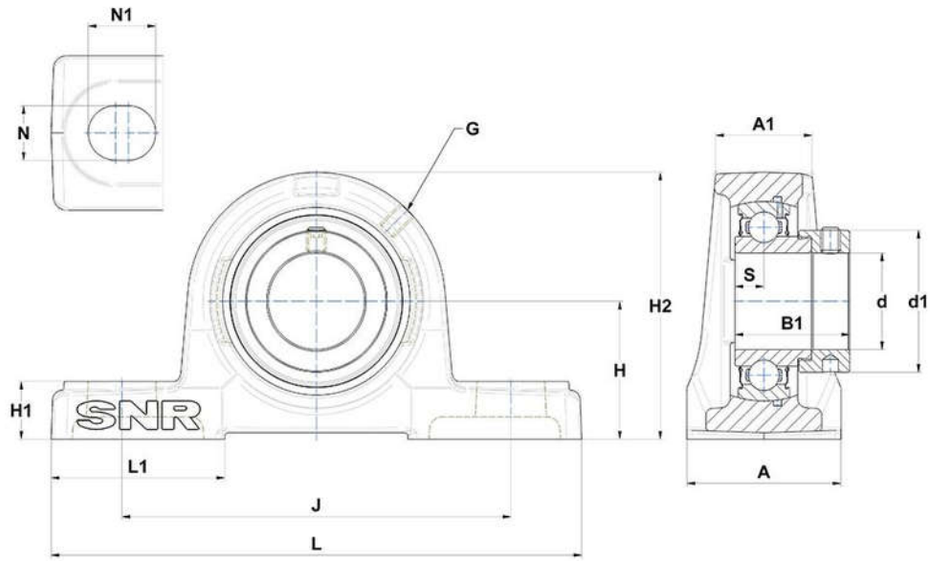

PRODUCT DEFINITION

Brand	SNR
A - Housing width	48 mm
A1 - Housing top width	31 mm
B - Width of Inner Ring	25,4 mm
d - Shaft diameter	35 mm
d1 - Outer dia of eccent. Lock. collar / nut of adapter sleeve	51,1 mm

NTN Europe
1 rue des Usines · BP 2017 · 74010 Annecy Cedex · France · Tel. +33 (0)4 50 65 30 00
S.A. au capital de 322 639 919 € · RCS ANNECY B 325 821 072 · Id. Fiscale : FR 48 325 821 072
SIRET 325 821 072 00015 · Code APE 2815 Z · Code NACE 28.15

PRODUCT DEFINITION	
G - Grease fitting	M6x1
H - Distance mounting base to centerline spheric. seating diam.	47,6 mm
H1 - Housing foot height	19 mm
H2 - Housing height	94 mm
J - Mounting holes distance	127 mm
L - Housing length	167 mm
L1 - Housing foot length	54 mm
N - Mounting hole dimension	17 mm
N1 - Mounting hole length	21 mm
S - Distance front side/bearing centre	9,5 mm

PRODUCT PERFORMANCE	
C - Dynamic load rating	25700000 mN
C0 - Static load rating	15200000 mN
Operating temperature min.	253,15 °K
Operating temperature max.	373,15 °K

OTHER FEATURES	
Mass	1,7 kg
Recommended tightening torque for set screw	11.5 N-m