II5841

Inductive sensor

IIK3015BBPKG/M/US-104-DPS

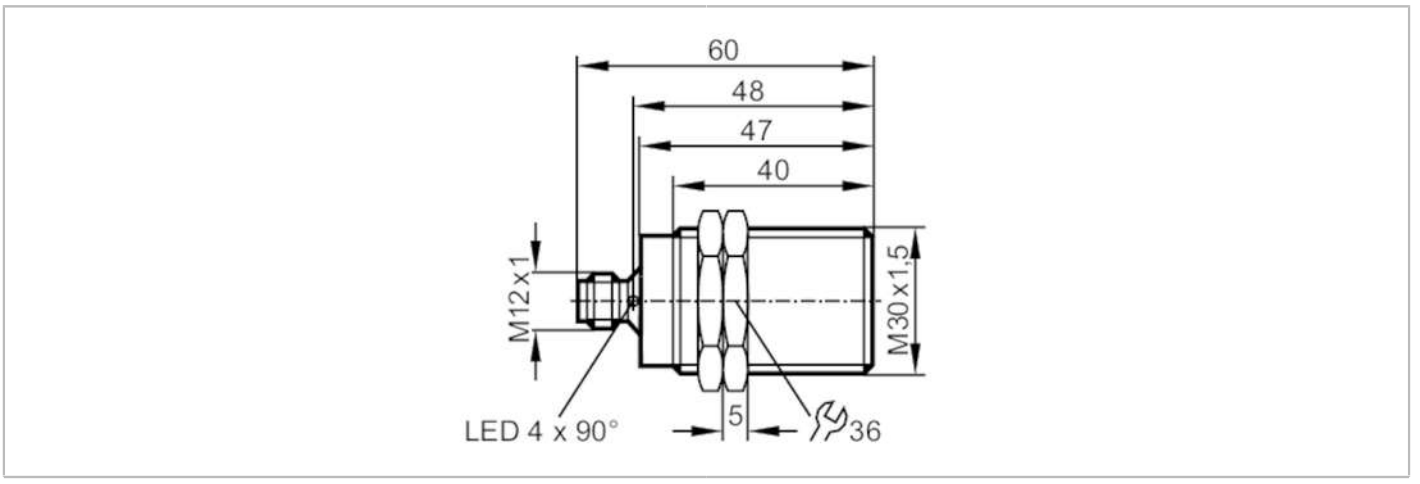

Product characteristics		
Electrical design		PNP
Output function		normally open
Sensing range	[mm]	15
Housing		threaded type
Dimensions	[mm]	M30 x 1.5 / L = 60
Application		
Special feature		Increased sensing range
Electrical data		
Operating voltage	[V]	10...36 DC
Current consumption	[mA]	15; (24 V)
Protection class		II
Reverse polarity protection		yes
Outputs		
Electrical design		PNP
Output function		normally open
Max. voltage drop switching output DC	[V]	2.5
Permanent current rating of switching output DC	[mA]	250
Switching frequency DC	[Hz]	100
Short-circuit protection		yes
Type of short-circuit protection		pulsed
Overload protection		yes
Detection zone		
Sensing range	[mm]	15
Operating distance	[mm]	0...12.1
Increased sensing range		yes

II5841

Inductive sensor

IIK3015BBPKG/M/US-104-DPS

Accuracy / deviations			
Hysteresis	[% of Sr]	1...15	
Operating conditions			
Ambient temperature	[°C]	-25...70	
Protection		IP 67	
Tests / approvals			
EMC		EN 60947-5-2	
		EN 55011	class B
MTTF	[years]	1759	
Mechanical data			
Weight	[g]	121.9	
Housing		threaded type	
Mounting		flush mountable	
Dimensions	[mm]	M30 x 1.5 / L = 60	
Thread designation		M30 x 1.5	
Materials		housing: brass white bronze coated; sensing face: LCP natural	
Displays / operating elements			
Display		switching status	4 x LED, yellow
Accessories			
Items supplied		lock nuts: 2	
Remarks			
Pack quantity		1 pcs.	
Electrical connection - plug			

Connector: 1 x M12; coding: A



Connection

