Brand of NTN corporation

Technical data

22209EAKW33ZZ

Spherical roller bearings



[KIZEI] ULTAGE

VISUAL (S)

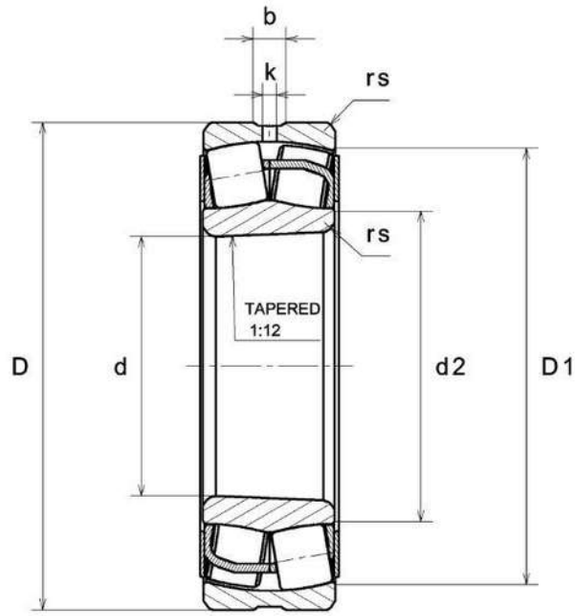

22209EAKW33ZZ
Spherical roller bearings

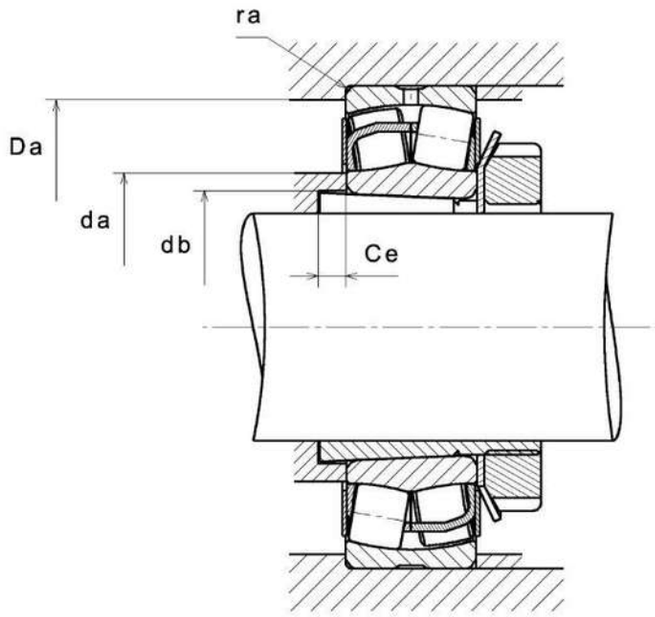

PRODUCT DEFINITION	
Brand	SNR
d - Internal diameter	45 mm
D - External diameter	85 mm
B - Bearing/Inner ring width	23 mm
d2 - External diameter inner ring	54,9 mm
D1 - Inner diameter outer ring	75,6 mm
rs - Min fillet radius	1,1 mm
Number of lubrication holes	3
b - Groove width	5,83 mm
k - Hole diameter	2,5 mm
Associated sleeve reference	H309
Radial clearance class	CN
Mass	0,58 kg

22209EAKW33ZZ
Spherical roller bearings

PRODUCT PERFORMANCE	
C - Dynamic load	121000000 mN
C0 - Static load	113000000 mN
Cu - Fatigue limit load	13800000 mN
e - Coefficient	0.26
Y0 - Static axial load coefficient	2.58
Y1 - Lower axial load coefficient	2.64
Y2 - Upper axial load coefficient	3.94
N ref - Reference thermal speed	44400 °/s
N lim - Mechanical Limit Speed	58800 °/s
Tmin - Min operating temperature	233,15 °K
Tmax - Max operating temperature	473,15 °K

BEARING FREQUENCIES	
BPFO - Over rolling frequency on outer ring (60 rpm)	7.154 Hz
BPFI - Over rolling frequency on inner (60 rpm)	9.846 Hz
BSF - Over rolling frequency on rolling element (60 rpm)	6.068 Hz
BRF - Rotational frequency – rolling element (60 rpm)	3.034 Hz
FTF - Rotational frequency - cage (60 rpm)	0.421 Hz

ABUTMENT	
da max - Max shoulder diameter IR	54,9 mm
da min - Min shoulder diameter IR	52 mm
db - Min diameter for Sleeve	50 mm
Ce - Min length fro Sleeve	7 mm
Da max - Max shoulder diameter OR	78 mm

ABUTMENT

ra max - Max shaft & housing fillet radius	1 mm

INDUSTRY CALCUL FACTORS

Equivalent dynamic radial load

$P = X.Fr + Y.Fa$

Fa / Fr ≤ e		Fa / Fr > e	
X	Y	X	Y
1	Y1	0.67	Y2

Equivalent static radial load

$Po = Xo.Fr + Yo.Fa$

X_0	Y_0
1	Y0

The values for e, Y1, Y2 and Y0 are shown in the above table .