PRODUCT DETAILS

ARTICLE: 4392CC

ROLLER P 82X70 47X16 BALL BEARING 20



Wheel series RP

Monolitic polyammide 6 rollers availble with or without ball bearings.
Wheel fitted with ball bearings.

Technical data

Wheel diameter	D	82 mm
Tyre width	E	70,0 mm
Bearing seat diameter	s	47 mm
Bore diameter	d	20 mm
Outer faces bearings distance	V	66 mm
Weight article		0,510 kg
Hub width	L	70 mm
Load Capacity		700 kg

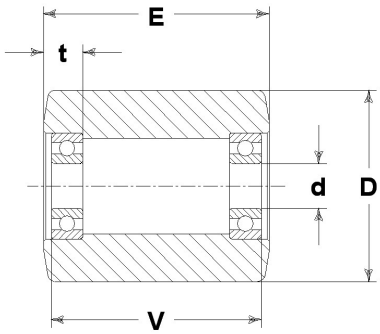

GENERAL INFORMATION / RECOMMENDATIONS AND WARNINGS

The cited text and the complete catalogue in their most up-dated versions are available in the OEM's website page www.lagspa.it/downloads. The dimensions, descriptions, specifications and illustrations herein are indicative and subject to variations without notice. The fact that products are illustrated herein does not necessarily imply they are available from stock nor does it place us under any obligation to supply them.
Tests carried out refer to the original products with original accessories: the replacement of one of the components with others of different manufacture might prevent the same results from being achieved and will automatically invalidate any guarantee. Please contact our technical service concerning any special application.