Product Data Sheet

ref: P1036 issue: C date: April 12

UNISTRUT®

atkore INTERNATIONAL

P1036 - FLAT FITTING 90 DEG

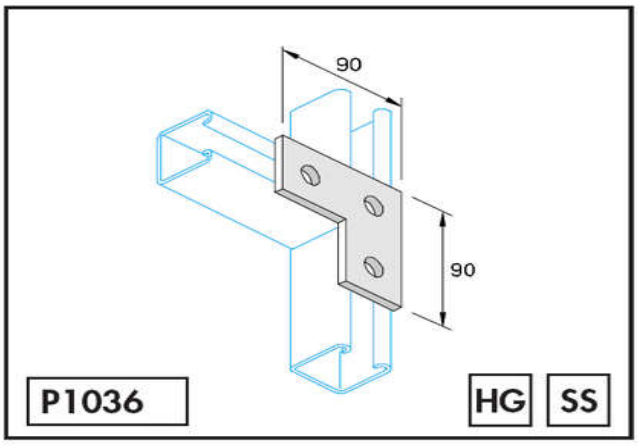

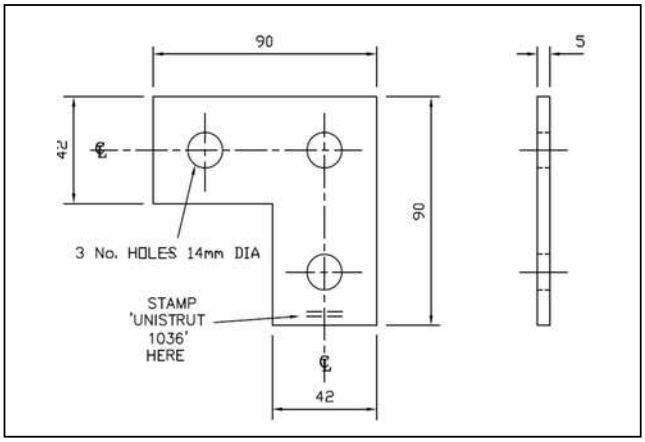

Material:- Mild Steel to BS EN 10149-2-S315MC or Q345
S/STEEL BS EN 10088-2-1.4404+1D (S316)

Fixings:- All 14mm diameter holes use M12 grade 8.8 hex head screws with M12 - BSEN 10025 S275 or Q235 channel nuts.

Application:- Drawings illustrate only one application for the fitting. In most cases many other applications are possible. The channel shown in the application are P1000.41mm square,except where noted otherwise.
Loading data varies due to specific application, for all queries contact Unistrut UK.

Finishes:
P1036:- Hot Dip Galvanized - Process in accordance with BS EN ISO 1461 to a mean coating thickness (minimum) of 55µm.
P1036SS:- Self Colour

Part Weight: 0.192 Kg
Box Weight: 3.84Kg
No. Per Box: 20

UNISTRUT HEALTH & SAFETY DATA SHEET REF'S :
No. 001 - PLAIN STEEL, PRE-GALVANIZED, GALVANIZED AND STAINLESS STEEL COMPONENTS
No. 099 - HOT DIP GALVANIZING (CHANNEL & COMPONENTS)
No. 102 - STEEL

BS EN ISO 9001 Cert. FM825