DATASHEET

FLEXIBLE TOGGLE LATCH 40019 ZI

DESCRIPTION:

Miniature, fully enclosed latch with a spring mechanism which gives a wide positioning tolerance.
Concealed catch plate with assembly rivets.
Compression springs made in Stainless Steel 18/8
Weld or M3 screw fixing
Maximum operating tension: 20daN
Latch to catch distance 25.5 mm

Supplied with dimensions template for marking out and catch.

FEATURES:

- Finish: Zinc Plated
- Material: Steel
- Dimensions: 34.5 x 18 x 8 mm
- Depth: 8 mm
- Length: 34.5 mm
- Width: 18 mm

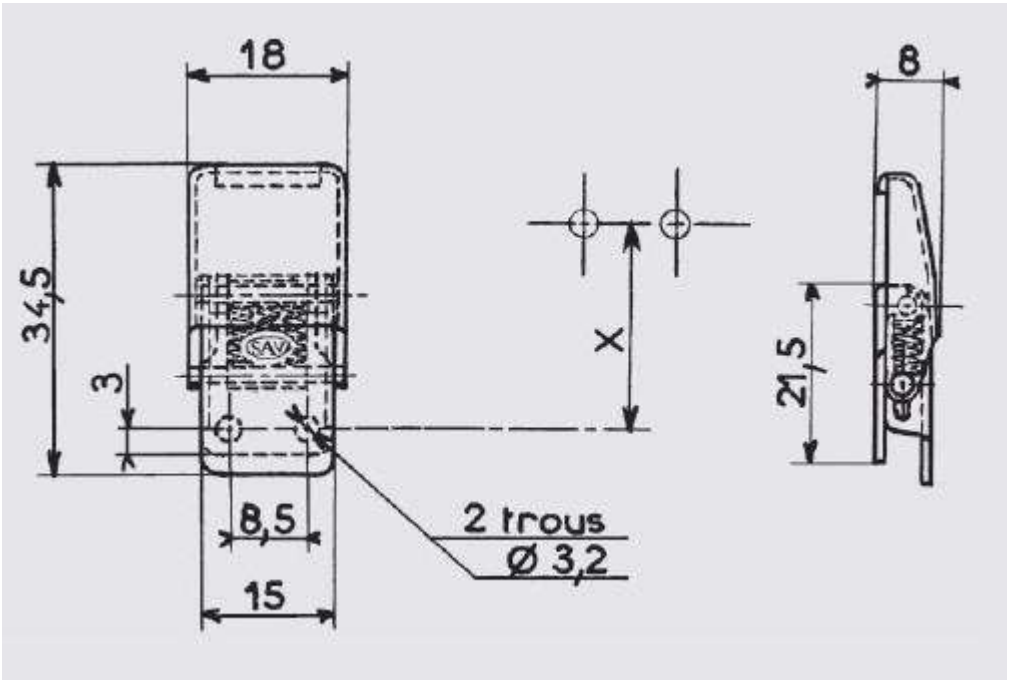
18
8
34,5
3
X
21,5
8,5
2 trous
Ø 3,2
15

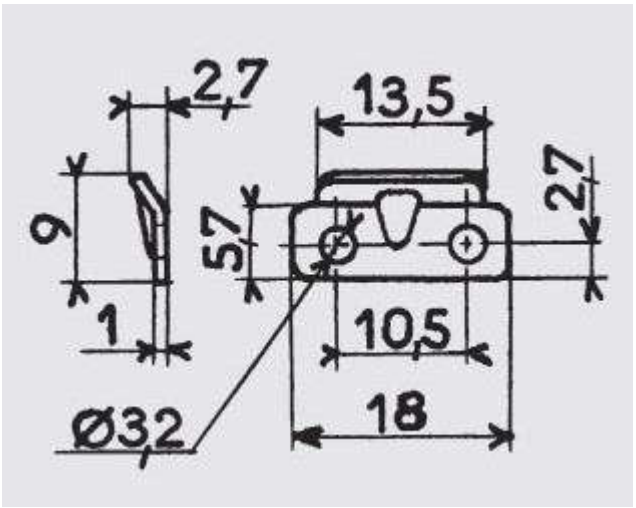
2,7
13,5
9
57
2,7
1
10,5
Ø3,2
18