Top View of Assembly

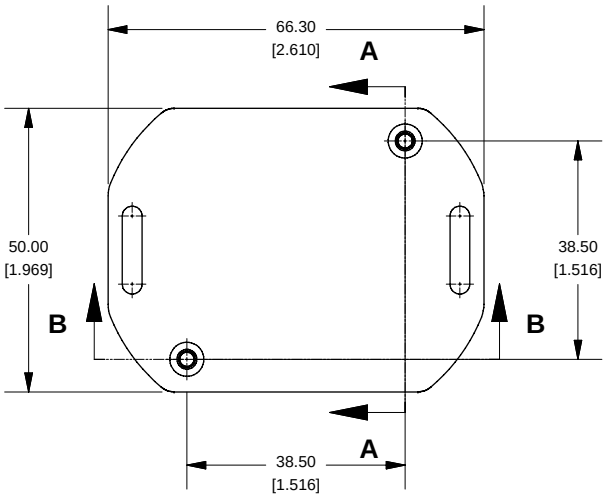

SECTION A-A
End View of Assembly

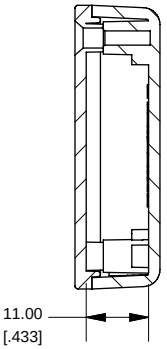

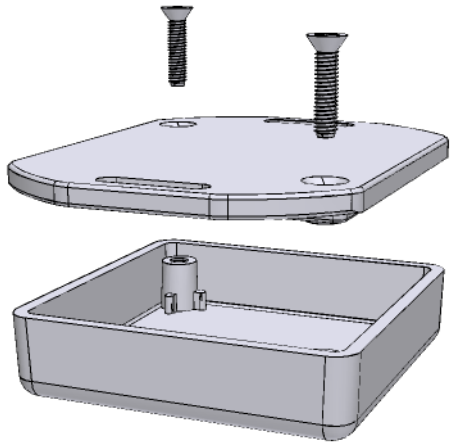

SECTION B-B
Side View of Assembly

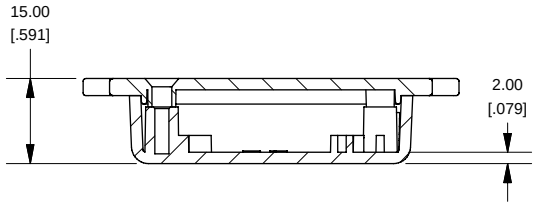

Top View Looking Inside Box

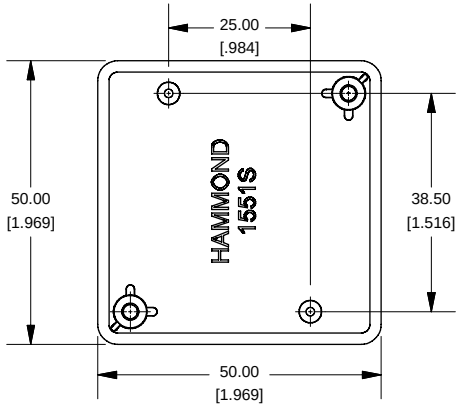

Lid

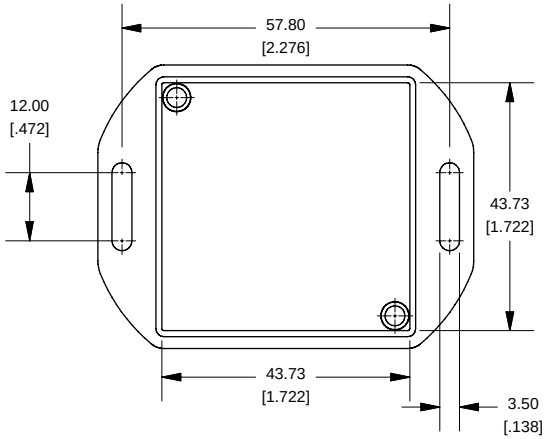

SECTION C-C
Boss Heights

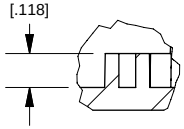

Maximum P.C. Board Size

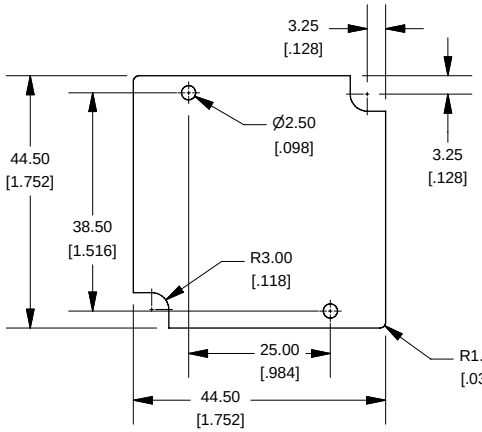

NOTE
Purchased assembly includes lid and box made from GP ABS material and cover screws.

1551SFL	
1551SFL Enclosure	
Black Enclosure - RAL 9011 - UL94 - HB	1551SFLBK
Gray Enclosure - RAL 7035 - UL94 - HB	1551SFLGY
Translucent Blue - UL94 - HB	1551SFLTBU
ACCESSORIES	
Recommended Screw Torque: 15-20 ozf.in (10-15 cN.m)	
Black Enclosure Cover Screws (Pkg 100) [#4 X 1/2" Self Tapping]	1591TS100BK
Grey Enclosure Cover Screws (Pkg 100) [#4 X 1/2" Self Tapping]	1591TS100
P.C. Board Screws (Pkg 100) [#2 x 3/16" Self Tapping]	1551ATS100

HAMMOND MANUFACTURING™

1551SFL

www.hammondmfg.com