Brand of NTN corporation

Technical data

ESPE203

Bearing units



Grey cast housing, radial insert ball bearing with eccentric locking collar, single lip seal

KIT CONTENT

ES203G2, PE203

VISUAL (S)

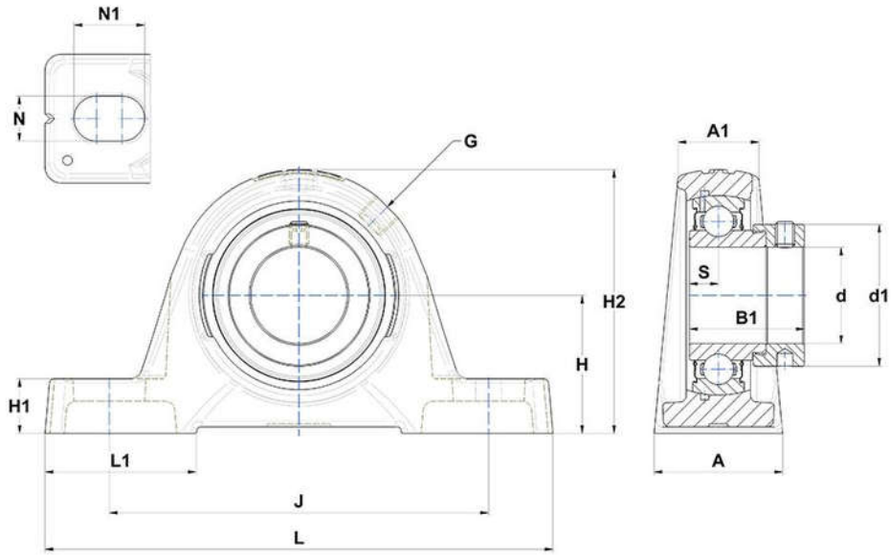

PRODUCT DEFINITION

Brand	SNR
A - Housing width	30 mm
A1 - Housing top width	18 mm
B - Width of Inner Ring	19,1 mm
d - Shaft diameter	17 mm
d1 - Outer dia of eccent. Lock. collar / nut of adapter sleeve	27,2 mm

NTN Europe
1 rue des Usines · BP 2017 · 74010 Annecy Cedex · France · Tel. +33 (0)4 50 65 30 00
S.A. au capital de 322 639 919 € · RCS ANNECY B 325 821 072 · Id. Fiscale : FR 48 325 821 072
SIRET 325 821 072 00015 · Code APE 2815 Z · Code NACE 28.15

PRODUCT DEFINITION	
G - Grease fitting	M6x1
H - Distance mounting base to centerline spheric. seating diam.	30,2 mm
H1 - Housing foot height	10 mm
H2 - Housing height	57 mm
J - Mounting holes distance	95 mm
L - Housing length	125 mm
L1 - Housing foot length	38 mm
N - Mounting hole dimension	11 mm
N1 - Mounting hole length	19 mm
S - Distance front side/bearing centre	6,5 mm

PRODUCT PERFORMANCE	
C - Dynamic load rating	9550000 mN
C0 - Static load rating	4780000 mN
Operating temperature min.	253,15 °K
Operating temperature max.	373,15 °K

OTHER FEATURES	
Mass	0,43 kg
Recommended tightening torque for set screw	5.5 N-m