

Tempatron Tel: +44(0)1621 859500 Fax: +44(0)1621 855335

IR33 Smart Refrigeration Controllers

Models Available

IR33S 1 Relay O/P Refrigeration Controller
IR33Y 2 Relay O/P Refrigeration Controller
IR33C 4 Relay O/P Refrigeration Controller

Product Features

- No programming required
- 4 pre-loaded configurations
- NTC or PTC thermistor probe inputs
- Up to 4 relay outputs
- 16A compressor output
- Real time clock and HACCP function
- Infrared receiver and buzzer
- 115 to 230Vac powered
- RS-485 serial connection
- IP65 enclosure
- Plug-in terminals
- Front panel mounting system

The IR33 smart refrigeration controllers are designed specifically for the refrigeration installer as they enable selection from a range of pre-loaded applications, eliminating the need to program the controller parameters. The controller then just needs to be wired up and installed in the panel.

The controllers have up to 3 NTC or PTC inputs and versions are available which have 1, 2, 3 or 4 relay outputs for control of the compressor, active defrost, evaporator ventilation fan and auxiliary output. The 4 relay version also incorporates a real time clock and HACCP function.
The controllers are housed in a compact panel mounting enclosure and are powered from 115 to 230Vac. All versions can be connected to a network for monitoring and programming using the optional RS-485 serial interface.

For digital monitoring and control in refrigeration and food processing

Dimensions

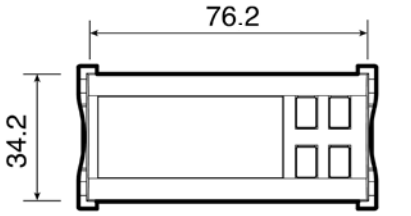

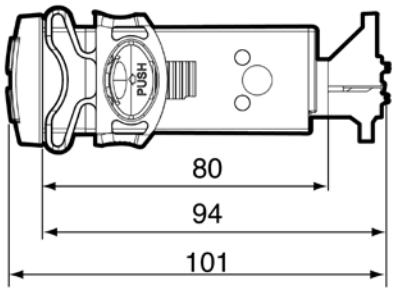

Panel cutout 71mm x 29mm (-0.0/+0.5)

Allow 95mm x 40mm clearance around controller for panel clip

All dimensions in mm

Connections

IR33S7HR0E

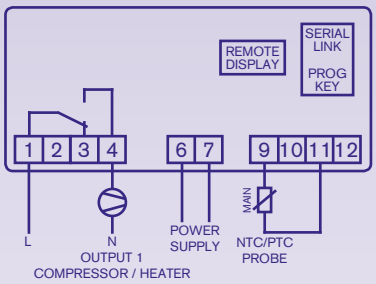

IR33Y7HR0E

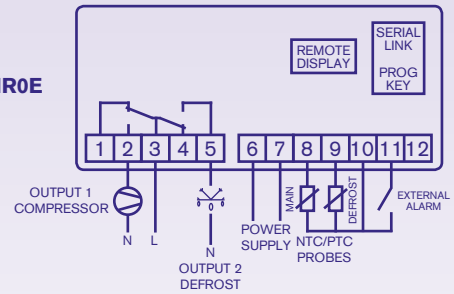

IR33C7HB0E

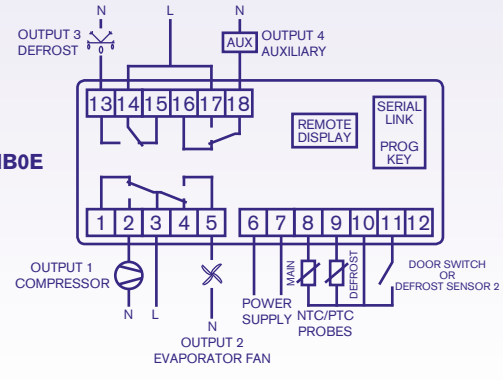

Ordering information

Model	Code	Description
	IR33S7HR0E	1 Relay Output Digital Refrigeration Controller For use on static refrigeration units (i.e. with no evaporator fan)
	IR33Y7HR0E	2 Relay Output Digital Refrigeration Controller For use on static refrigeration units with active defrost by heater
	IR33C7HB0E	4 Relay Output Digital Refrigeration Controller For use on ventilated refrigeration units with compressor, defrost and fan control with additional auxiliary output

Options	Code	Description
	IRTRRES000	Small infrared remote control
	IROPZKEY00	Programming key with battery
	IROPZKEYA0	Programming key with 230V power supply
	IROPZ485S0	RS485 serial communication interface

Example	**IR33S7HR0E**

Options

Temperature Probes

A range of NTC and PTC temperature probes are available to suit the IR33 refrigeration controllers.

Remote Control

The infrared remote control allows access to all the main functions and configuration parameters for easy set up of all IR33 controllers from a distance.

Programming Key

All IR33 controllers can be programmed quickly using the optional programming key, even when not powered, reducing the risk of errors.

Specification

Accuracy:
- NTC (-50°C to +50°C): ±1°C
- NTC (+50°C to +90°C): ±3°C
- NTC-HT (-20°C to +115°C): ±1.5°C
- NTC-HT (outside above): ±4°C
- PTC (-50°C to +50°C): ±2°C
- PTC (+50°C to +150°C): ±4°C

Power Supply Voltage:
- 115 to 230Vac (±10%)

Frequency:
- 50/60Hz

Burden:
- <6VA

Inputs:
- 3 NTC/PTC inputs (10kohm @ 25°C) (or 2 NTC/PTC inputs & 1 digital input)

Scale Range:
- NTC: -50 to +90°C (standard)
- NTC-HT: -40 to +150°C (extended)
- PTC: -50 to +150°C (standard)

Resolution:
- 0.1°C between -20.0°C and 20.0°C
- 1°C over the rest of the range

Relay Outputs:
- 1, 2 or 4 pole changeover contacts
- Compressor: 16A at 250Vac
- Other: 12A at 250Vac (resistive)

Operating Temperature & Humidity:
- -10°C to 60°C
- <90% rH (non-condensing)

Enclosure Code:
- Case IP65

Weight:
- IR33S: 160g
- IR33Y: 180g
- IR33C: 220g

Markings:
- CE marked (meets EN61010-1 low voltage and EN50081-1/50082-1 EMC directives)

Specification subject to change without notice.

Tempatron: Eltime House, Hall Road, Maldon, Essex, CM9 4NF UK.

TEMPATRON

Tempatron Industrial Controls is a division of Eltime Ltd.

© Eltime Ltd. Tempatron IR33 Smart Refrigeration Controllers 04/2011