E10109

Wirable socket

SDOGH040PLSFKPG

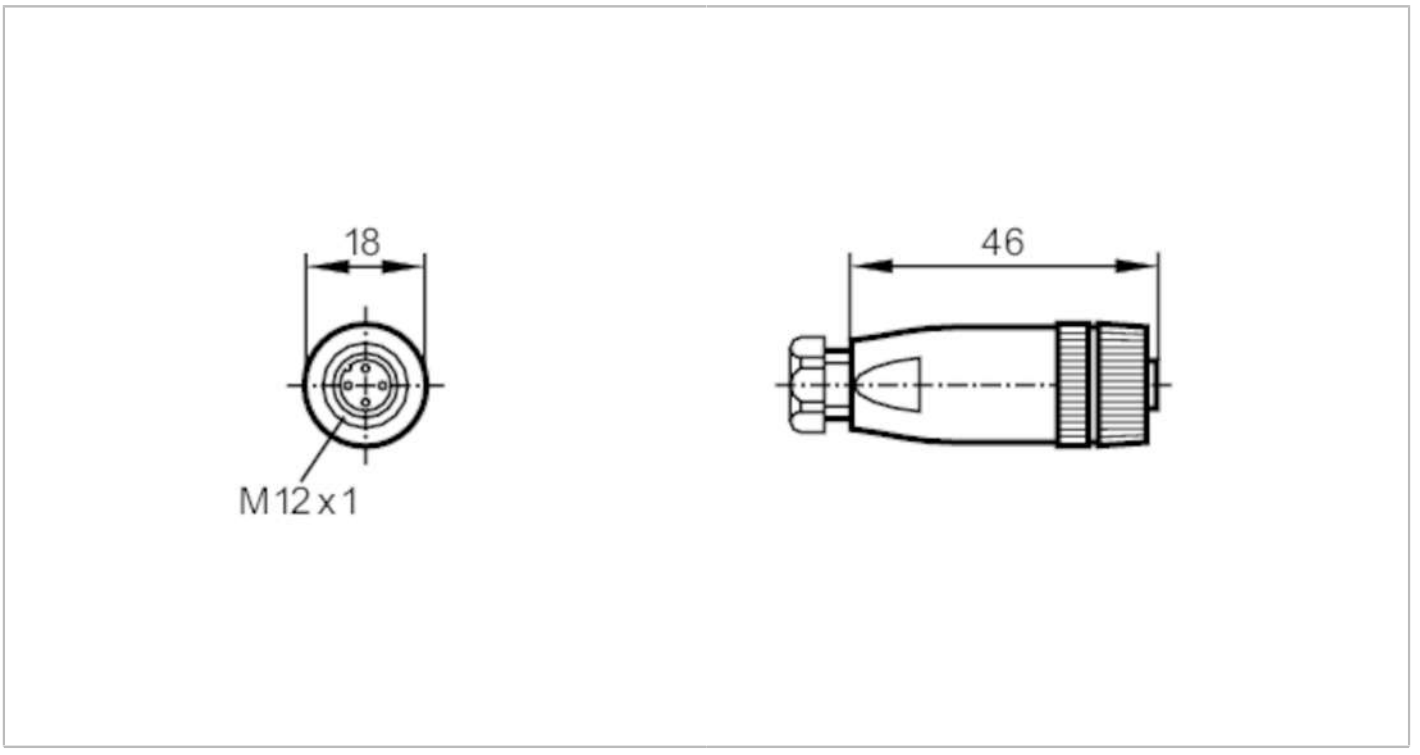

Electrical data		
Operating voltage	[V]	< 45 AC / < 70 DC
Max. current load total	[A]	4; (...40 °C)
Operating conditions		
Ambient temperature	[°C]	-25...85
Protection		IP 67
Mechanical data		
Weight	[g]	14.9
Dimensions	[mm]	18 x 18 x 46
Materials		PA
Moulded-body material		PA
Material nut		PA
Remarks		
Pack quantity		1 pcs.

E10109

Wirable socket

SDOGH040PLSFKPG

Electrical connection

screw terminals: ...0.75 mm²; Cable sheath: Ø 4...6 mm

Electrical connection - socket

Connector: 1 x M12, straight; coding: B; Moulded body: PA; Locking: PA



Connection

