OGT302

Diffuse reflection sensor

OGTIFPKG/US

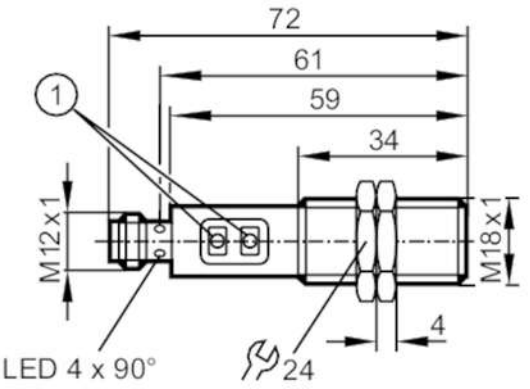

1 programming buttons

Product characteristics		
Type of light		infrared light
Housing		threaded type
Application		
Function principle		Diffuse reflection sensor
Electrical data		
Operating voltage	[V]	10...36 DC
Current consumption	[mA]	25
Protection class		II
Reverse polarity protection		yes
Type of light		infrared light
Wave length	[nm]	855
Outputs		
Electrical design		PNP
Output function		light-on/dark-on mode; (programmable)
Max. voltage drop switching output DC	[V]	2.5
Permanent current rating of switching output DC	[mA]	150; (200 (...60 °C))
Switching frequency DC	[Hz]	2000
Short-circuit protection		yes
Type of short-circuit protection		pulsed
Overload protection		yes
Detection zone		
Range	[mm]	2...600; (white paper 200 x 200 mm 90% remission)
Factory setting		light-on mode
Setting range	[mm]	150...600
Range adjustable		yes
Max. light spot diameter	[mm]	66

OGT302

Diffuse reflection sensor

OGTIFPKG/US

Light spot dimensions refer to		at maximum range	
Operating conditions			
Ambient temperature	[°C]	-25...80	
Protection		IP 65; IP 67; IP 68; IP 69K	
Tests / approvals			
EMC		EN 60947-5-2	
MTTF	[years]	1076	
Mechanical data			
Weight	[g]	61.1	
Housing		threaded type	
Dimensions	[mm]	M18 x 1 / L = 72	
Thread designation		M18 x 1	
Materials		stainless steel (316L/1.4404); PA; LCP; EPDM; TPU	
Lens material		PMMA	
Displays / operating elements			
Display		switching status	1 x LED, yellow
Teach function		yes	
Electronic lock		yes	
Accessories			
Items supplied		lock nuts: 2	
Remarks			
Remarks		operating voltage "supply class 2" according to cULus	
Pack quantity		1 pcs.	
Electrical connection			

Connector: 1 x M12; coding: A



OGT302

Diffuse reflection sensor

OGTIFPKG/US

Connection

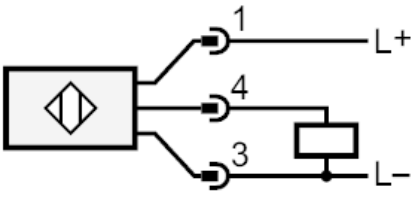

Diagrams and graphs

excess gain graph

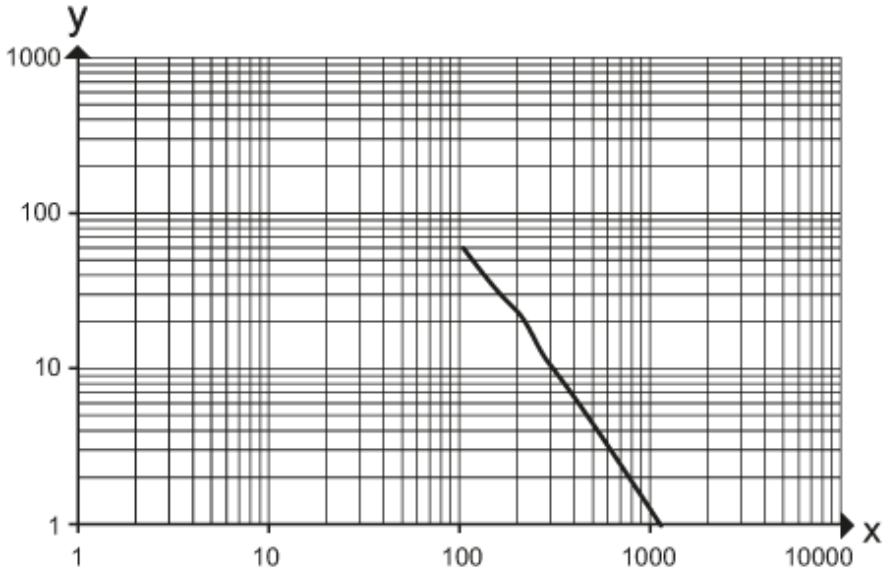

x: distance [mm]

y: excess gain factor