DATASHEET - ZBT12-0,6



Overload relay, ZBT12, Ir= 0.4 - 0.6 A, 1 N/O, 1 N/C, Direct mounting, IP20

Part no. ZBT12-0,6
Catalog No. 190962

Powering Business Worldwide

Delivery program

Product range			Overload relay ZBT up to 97 A
Product range			Accessories
Accessories			Overload relays
Frame size			ZBT12
Phase-failure sensitivity			IEC/EN 60947, VDE 0660 Part 102
Description			Test/off button Reset pushbutton manual/auto Trip-free release Überlastauslöser: Auslöseklasse 10 A
Mounting type			Direct mounting
	I_r	A	0.4 - 0.6
Contact sequence			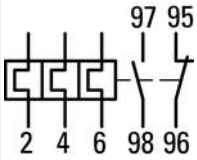
Auxiliary contacts			
N/O = Normally open			1 N/O
N/C = Normally closed			1 N/C
For use with			DILMT7 DILMT9 DILMT12 DILMT17 DILMT25 DILMT32

Technical data

General

Standards			IEC/EN 60947, GB14048
Climatic proofing			Damp heat, constant, to IEC 60068-2-78 Damp heat, cyclic, to IEC 60068-2-30
Ambient temperature			
			Operating range to IEC/EN 60947: -5 - +40 °C
Open		°C	-25 - +55
Enclosed		°C	- 25 - 40
Temperature compensation			Continuous
Weight		kg	0.104
Mechanical shock resistance		g	10 Sinusoidal Shock duration 10 ms
Degree of Protection			IP20
Protection against direct contact when actuated from front (EN 50274)			Finger and back-of-hand proof

Main conducting paths

Rated impulse withstand voltage	U_{imp}	V AC	6000
Overvoltage category/pollution degree			III/3
Rated insulation voltage	U_i	V	690
Rated operational voltage	U_e	V AC	690

Safe isolation to EN 61140			
Between auxiliary contacts and main contacts		V AC	440
Between main circuits		V AC	440
Terminal capacities		mm^2	
Solid		mm^2	1 x (1 - 6)
Flexible with ferrule		mm^2	1 x (1 - 6)
Stranded		mm^2	1 x (1 - 6)
Terminal screw			M3.5
Tightening torque		Nm	1.2
Stripping length		mm	8
Tools			
Pozidriv screwdriver		Size	2

Auxiliary and control circuits

Rated impulse withstand voltage	U_{imp}	V	4000
Overvoltage category/pollution degree			III/3
Terminal capacities		mm^2	
Solid		mm^2	1 x (0.75 - 2.5)
Flexible with ferrule		mm^2	1 x (0.75 - 2.5)
Terminal screw			M3
Tightening torque		Nm	0.8
Stripping length		mm	6
Tools			
Pozidriv screwdriver		Size	2
Standard screwdriver		mm	1 x 6
Rated insulation voltage	U_i	V AC	690
Rated operational voltage	U_e	V AC	690
Conventional thermal current	I_{th}	A	10
Rated operational current	I_e	A	
AC-15			
Make contact			
120 V	I_e	A	1.5
220 V 230 V 240 V	I_e	A	1.4
380 V 400 V 415 V	I_e	A	1.9
500 V	I_e	A	0.5
Break contact			
120 V	I_e	A	1.5
220 V 230 V 240 V	I_e	A	1.5
380 V 400 V 415 V	I_e	A	1.9
500 V	I_e	A	1.4
DC L/R ≦ 15 ms			
			Switch-on and switch-off conditions based on DC-13, time constant as specified.
24 V	I_e	A	0.9
60 V	I_e	A	0.75
110 V	I_e	A	0.55
220 V	I_e	A	0.27
Short-circuit rating without welding			
max. fuse		A gG/gL	6

Notes

Notes Ambient air temperature: Operating range to IEC/EN 60947, PTB: -5°C to +55°C
Main circuits terminal capacity solid and flexible conductors with ferrules: When using 2 conductors use equal cross-sections.

Design verification as per IEC/EN 61439

Technical data for design verification			

Operating ambient temperature min.		°C	-25
Operating ambient temperature max.		°C	55

Technical data ETIM 7.0

Low-voltage industrial components (EG000017) / Thermal overload relay (EC000106)			
Electric engineering, automation, process control engineering / Low-voltage switch technology / Overload protection device / Thermal overload relay (ecl@ss10.0.1-27-37-15-01 [AKF075014])			
Adjustable current range		A	0.4 - 0.6
Max. rated operation voltage Ue		V	690
Mounting method			Direct attachment
Type of electrical connection of main circuit			Screw connection
Number of auxiliary contacts as normally closed contact			1
Number of auxiliary contacts as normally open contact			1
Number of auxiliary contacts as change-over contact			0
Release class			Other
Reset function input			No
Reset function automatic			Yes
Reset function push-button			Yes

Approvals

Specially designed for North America			No

Dimensions

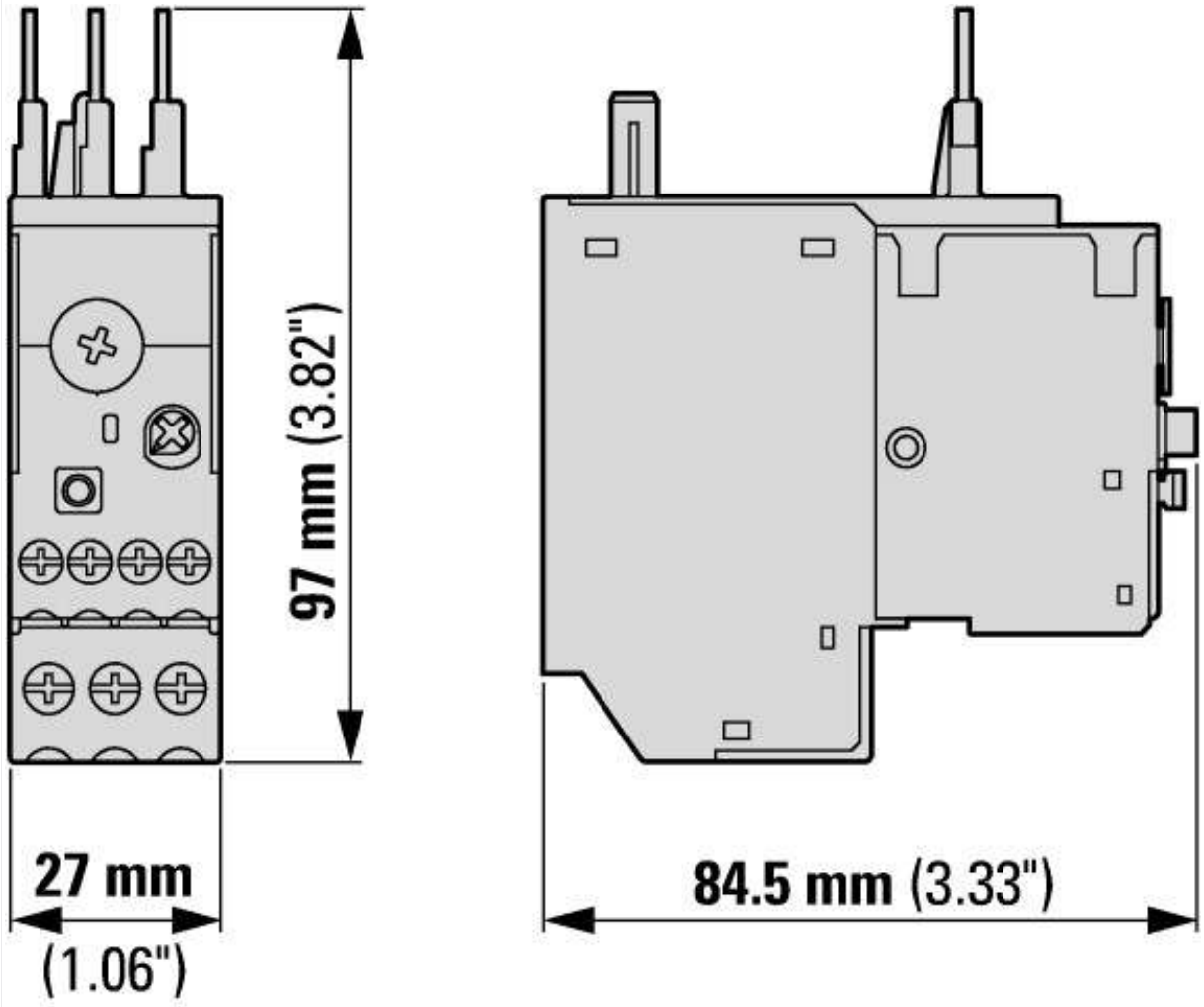

© 04/2020 by Eaton Industries GmbH