PowerStor®

Supercapacitors

PHV Series

Description

Cooper Bussmann PowerStor supercapacitors are unique, ultra-high capacitance devices utilizing electrochemical double layer capacitor (EDLC) construction combined with new, high performance materials. This combination of advanced technologies allows Cooper Bussmann to offer a wide variety of capacitor solutions tailored to specific applications that range from a few micro-amps for several days to several amps for milliseconds.

Features & Benefits

- Large capacitance for high energy density
- Ultra Low ESR for high power density

Applications

- Pulse Power
- Bridging or hold-up power

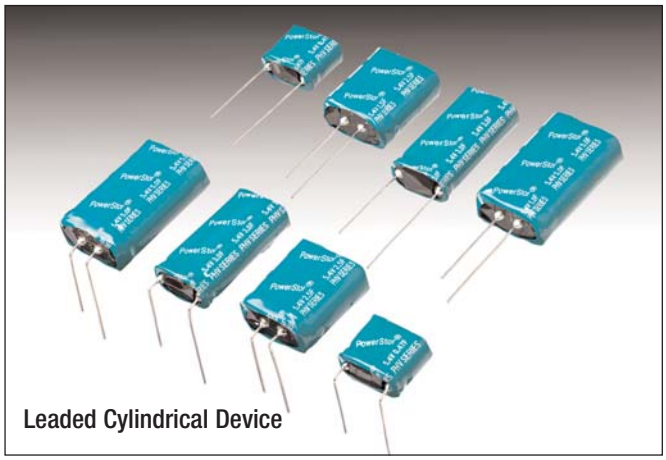

Leaded Cylindrical Device

Specifications	
Working Voltage (Maximum)	5.4V
Surge Voltage	6.0V
Nominal Capacitance Range	0.47F to 5F
Capacitance Tolerance	-10% to +30% (20°C)
Operating Temperature Range	-40°C to 65°C
Extended Operating Temperature Range	-40°C to 85°C (with linear voltage derating to 4.0V @ 85°C)

Standard Product

Nominal Capacitance (F)	Part Number		Maximum ESR (Ω) (Equivalent Series Resistance) Measured @		Nominal Leakage Current (μA) After 100 Hrs. @ 5V, 20°C	Nominal Dimensions (mm)	Typical Mass (grams/piece)
	Vertical	Horizontal	1kHz	100Hz			
0.47	PHV-5R4V474-R	PHV-5R4H474-R	0.300	0.40	13	8.5 x 16.8 x 14.0	2.6
1.5	PHV-5R4V155-R	PHV-5R4H155-R	0.120	0.16	18	8.5 x 16.8 x 21.5	3.0
2.5	PHV-5R4V255-R	PHV-5R4H255-R	0.075	0.08	24	10.5 x 20.8 x 22.5	4.5
3.0	PHV-5R4V305-R	PHV-5R4H305-R	0.075	0.08	25	8.5 x 16.8 x 31.5	4.8
5.0	PHV-5R4V505-R	PHV-5R4H505-R	0.065	0.07	28	10.5 x 20.8 x 32	6.8

Performance

Parameter	Capacitance Change (% of initial specified value)	ESR (% of initial specified value)
Life (1000 hrs @ 65°C @ 5.4Vdc)	≤ 30 %	≤ 200 %
Storage - Low and High Temperature (1000 hrs @ -40°C and 85°C)	≤ 30 %	≤ 200 %

Dimensions (mm)											
Vertical Part#	Horizontal Part#	A	B	C	d'	D	D'	E	E'	F	P
PHV-5R4V474-R	PHV-5R4H474-R	9.0	17.3	14.5	0.5	20	15	25	20	2.0	11.8
PHV-5R4V155-R	PHV-5R4H155-R	9.0	17.3	22.0	0.5	20	15	25	20	2.0	11.8
PHV-5R4V255-R	PHV-5R4H255-R	11.0	21.3	23.0	0.6	20	15	25	20	2.0	5.3
PHV-5R4V305-R	PHV-5R4H305-R	9.0	17.3	32.5	0.5	20	15	25	20	2.0	11.8
PHV-5R4V505-R	PHV-5R4H505-R	11.0	21.3	32.5	0.6	20	15	25	20	2.0	5.3
Tolerances		Maximum			± 0.02	Minimum				± 0.5	

Note: Longer lead is positive.

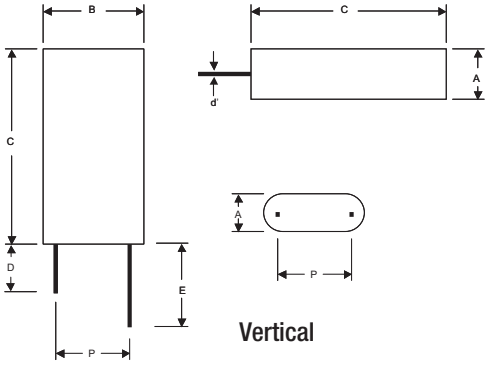

Vertical

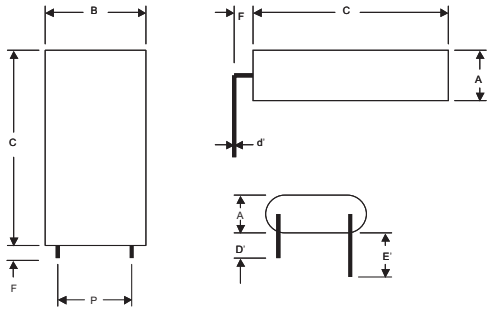

Horizontal

Part Numbering System											
P	HV	-	5	R	4	□	□	□	□	-	R
Series Code	Version		Voltage (V) R = Decimal			Configuration	Capacitance (μF) Value		Multiplier		RoHS Compliant
P = Pack			5R4 = 5.4V			V = Vertical H = Horizontal	Example: 155 = 15 x 10^5μF or 1.5F				

Packaging Information

Standard packaging: Bulk, 100 units per package.

Large, bulk packaging available upon request.

Part Marking

Manufacturer
Capacitance (F)
Max. Operating Voltage (V)
Series Code (or part number)
Polarity

North America
Cooper Bussmann
1225 Broken Sound Parkway NW
Suite F
Boca Raton, FL 33487-3533
Tel: 1-561-998-4100
Fax: 1-561-241-6640
Toll Free: 1-888-414-2645

Cooper Bussmann
P.O. Box 14460
St. Louis, MO 63178-4460
Tel: 1-636-394-2877
Fax: 1-636-527-1607

Europe
Cooper Bussmann
Cooper (UK) Limited
Burton-on-the-Wolds
Leicestershire • LE12 5TH UK
Tel: +44 (0) 1509 882 737
Fax: +44 (0) 1509 882 786

Cooper Bussmann
Avda. Santa Eulalia, 290
08223
Terrassa, (Barcelona), Spain
Tel: +34 937 362 812
+34 937 362 813
Fax: +34 937 362 719

Asia Pacific
Cooper Bussmann
1 Jalan Kilang Timor
#06-01 Pacific Tech Centre
Singapore 159303
Tel: +65 278 6151
Fax: +65 270 4160

The only controlled copy of this Data Sheet is the electronic read-only version located on the Cooper Bussmann Network Drive. All other copies of this document are by definition uncontrolled. This bulletin is intended to clearly present comprehensive product data and provide technical information that will help the end user with design applications. Cooper Bussmann reserves the right, without notice, to change design or construction of any products and to discontinue or limit distribution of any products. Cooper Bussmann also reserves the right to change or update, without notice, any technical information contained in this bulletin. Once a product has been selected, it should be tested by the user in all possible applications.

Life Support Policy: Cooper Bussmann does not authorize the use of any of its products for use in life support devices or systems without the express written approval of an officer of the Company. Life support systems are devices which support or sustain life, and whose failure to perform, when properly used in accordance with instructions for use provided in the labeling, can be reasonably expected to result in significant injury to the user.

© 2011 Cooper Bussmann
www.cooperbussmann.com

COILTRONICS® COOPER Bussmann® PowerStor®