E70432

DIN rail adapter

Mounting Set for AC2750 - AC2753

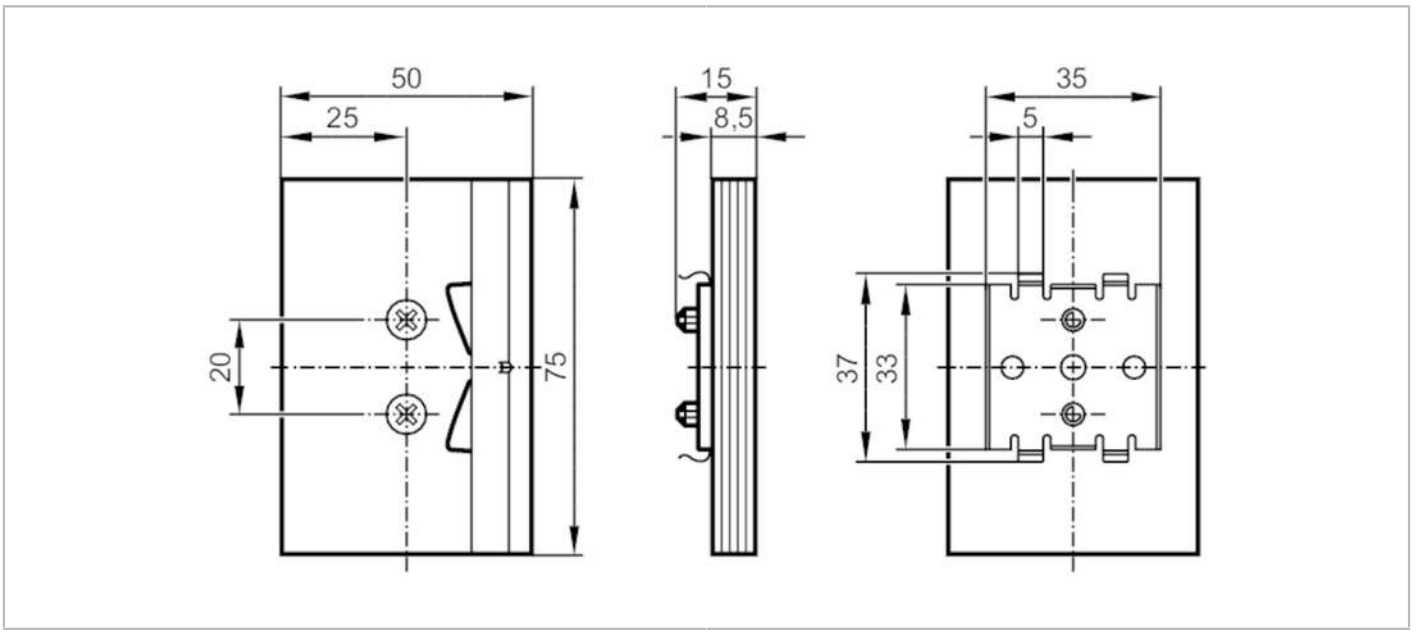

Application		
Design		for PCB module AC2750...53
Mechanical data		
Weight	[g]	55
Materials		screws: galvanised; DIN rail adapter: AlMgSi0.5 F22; mounting clip: C100S+QT galvanised
Accessories		
Items supplied		3M double-sided adhesive tape type 468 MP
Remarks		
Remarks		suitable for DIN rails TS35/7.5 and TS35/15 to EN 50022
Pack quantity		1 pcs.