SCHAEFFLER

Deep groove ball bearings 6003 (Series 60)

main dimensions to DIN 625-1

The datasheet is only an overview of dimensions and basic load ratings of the selected product. Please always observe all the guidelines in these overview pages. Further information is given on many products under the menu item "Description". You can also order comprehensive information via the Catalogue selection system (https://www.schaeffler.de/content.schaeffler.de/en/news_media/index.jsp) or by telephone on +49 (91 32) 82 - 28 97.

d	17 mm	
D	35 mm	
B	10 mm	
D_1	29,5 mm	
d_1	22,7 mm	
$D_{a\ max}$	33 mm	
$d_{a\ min}$	19 mm	
$r_{a\ max}$	0,3 mm	
r_{min}	0,3 mm	
m	0,038 kg	Mass
C_r	6400 N	Basic dynamic load rating, radial

C_{0r}	3250 N	Basic static load rating, radial
C_{ur}	162 N	Fatigue limit load, radial
n_G	31000 1/min	Limiting speed
$n_{\vartheta r}$	20300 1/min	Reference speed
f_0	14,3	Calculation factor

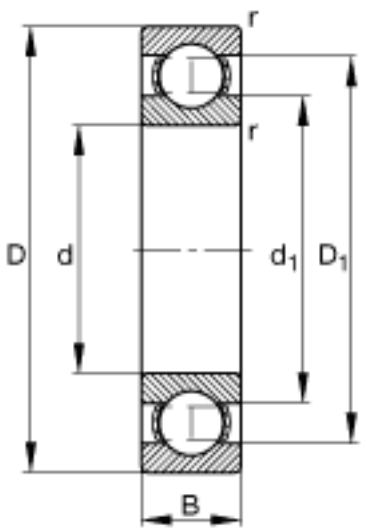

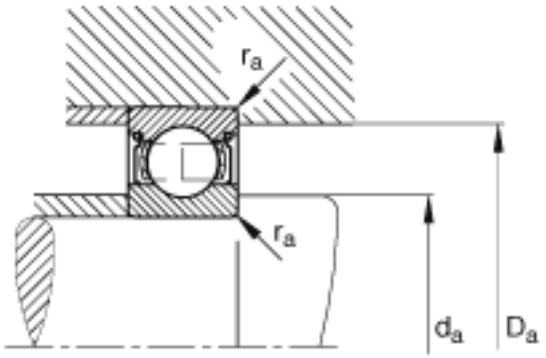
r_a
r_a
d_a
D_a