8BAC0133.000-1

1 General information

The module is designed for use in an ACOPOSmulti slot and provides 3 RS422 outputs for encoder emulation with up to 1 MHz signal frequency.

The outputs are electrically isolated from the ACOPOSmulti module. Power is supplied internally from the device. In order to establish a ground reference with a remote station, a ground wire must be supplied from the outside.

2 Order data

Model number	Short description	Figure
	Plug-in modules	
8BAC0133.000-1	ACOPOSmulti plug-in module, 3 RS422 outputs for ABR encoder emulation, 1 MHz	

Table 1: 8BAC0133.000-1 - Order data

3 Technical data

Model number	8BAC0133.000-1
General information	
Module type	ACOPOSmulti plug-in module
B&R ID code	0xB37F
Slot	Slot 2
Power consumption	Max. 2 W
Certifications	
CE	Yes
KC	Yes
UL	cULus E225616 Power conversion equipment
Module connection	
Module-side connection	9-pin female DSUB connector, coded
Status indicators	UP LED (module OK) and DN LED (module NOT OK)
Max. cable length	75 m
Terminating resistor	120 Ω
Digital outputs	
Quantity	3
Peak short circuit current	250 mA
Switching delay	
0 → 1	Max. 50 ns
1 → 0	Max. 50 ns
Switching frequency	Max. 1 MHz
Type	RS422 (differential)
Output voltage	
Minimum	2 V
Nominal	2.1 V
Maximum	5.1 V
Output status dependent on operating state	High resistance, until the software is initialized

Table 2: 8BAC0133.000-1 - Technical data

Model number	8BAC0133.000-1
Electrical isolation	
Output - ACOPOSmulti	Yes
Output - Output	No
Protective measures	
Short circuit protection	Yes
Overload protection	Yes
Environmental conditions	
Temperature	
Operation	
Nominal	5 to 40°C
Maximum	55°C
Storage	-25 to 55°C
Transport	-25 to 70°C
Relative humidity	
Operation	5 to 85%
Storage	5 to 95%
Transport	Max. 95% at 40°C

Table 2: 8BAC0133.000-1 - Technical data

4 Wiring

4.1 Pinout

Figure	X11	Pin	Description	Function
	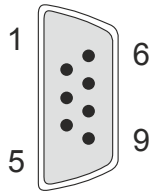	1	---	Keying
		2	A	Channel A
		3	A\	Channel A inverted
		4	B	Channel B
		5	---	Keying
		6	COM (2, 3, 4, 7, 8, 9)	Ground reference for the signals
		7	R\	Reference pulse inverted
		8	R	Reference pulse
		9	B\	Channel B inverted

Table 3: Encoder emulation interface 8BAC0133.000-1 - Pinout

Information:

The outputs must be terminated at the remote stations (on the receiver) with 120 Ω resistance. Cables with 120 Ω wave impedance must be used.

Only shielded cables are permitted to be used. The cable shield must be applied to both ends!

The ground reference must be included in the same cable as the signal lines. The ground reference of the remote station (receiver) should generally be used.

4.2 Input/Output circuit diagram

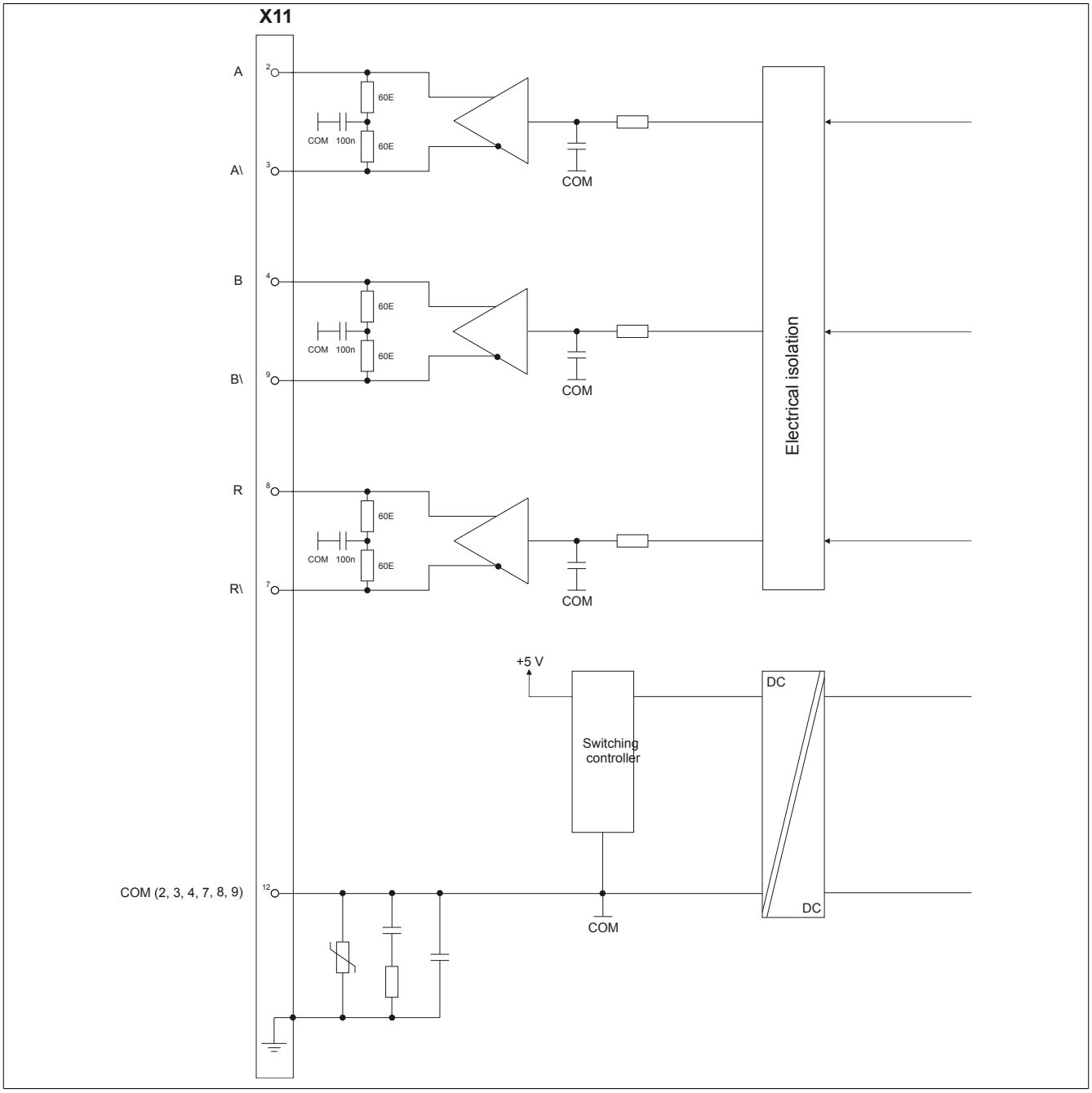

Figure 1: Encoder emulation interface 8BAC0133.000-1 - Input/Output circuit diagram

5 Status indicators

The indicators (LEDs UP/DN) are located on the front of the ACOPOSmulti drive or power supply module where the plug-in module is installed.

The UP/DN LEDs light up according to the module state.

UP-LED ... lit, if the module is functioning properly (green).
DN-LED ... lit, if the module is not (yet) functioning properly (red).

6 Firmware

The firmware is part of the operating system for the ACOPOSmulti drive system. Firmware is updated by updating the ACOPOSmulti operating system.