Filling unit, electrically operated, Series AS1-SSU

R412010484

General series information
Series AS1

- The AVENTICS Series AS1 is a modular, versatile maintenance unit for universal application. This Series offers compact dimensions, is highly efficient, lightweight and easy-to-use. The AVENTICS Series AS guarantees reliability, safety, and efficiency with a simplified assembly and maintenance efforts.



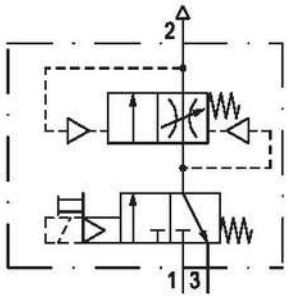

Technical data

Industry	Industrial
Type	adjustable filling time
Activation	Electrically
Nominal flow Qn	1300 l/min
Compressed air connection	G 1/4
Working pressure min.	2.5 bar
Working pressure max	10 bar
DC operating voltage	24 V
Sealing principle	soft seal
Pilot	Internal

Connection type	Pipe connection
Parts	3/2-directional valve Filling valve
Can be assembled into blocks	Can be assembled into blocks
basic valve with electrical connector	Basic valve with pilot valve
Type	Poppet valve
Min. ambient temperature	-10 °C
Max. ambient temperature	50 °C
Medium	Compressed air Neutral gases
Max. particle size	25 µm
Compressed air connection, exhaust	G 1/4
Air supply	left
Nominal flow Qn 1 to 2	1300 l/min
Nominal flow Qn 2 to 3	380 l/min
Operating voltage	24 V DC
Power consumption DC	2 W
Duty cycle	100 %
Protection class with connection	IP65
Electrical connection type 2	Plug
Electrical connection 2, thread size	ISO 15217, form C
Weight	0.36 kg

Material

Housing material	Polyamide
Seal material	Acrylonitrile butadiene rubber
Material threaded bushing	Die cast zinc
Material front plate	Acrylonitrile butadiene styrene
Part No.	R412010484

Technical information

The pressure dew point must be at least 15 °C less than ambient and medium temperature and may not exceed 3 °C.

Nominal flow Qn with secondary pressure p2 = 6 bar at Δp = 1 bar

The filling valve builds up pressure slowly in the pneumatic systems, i.e. prevents a sudden pressure build-up during a recommissioning after a mains pressure failure or avoids emergency OFF switching. This allows dangerous abrupt cylinder motions to be avoided.

Do not position filling valves or filling units upstream of open consumers, such as nozzles, air barriers, air curtains, since these may prevent through connection of components.

Dimensions in mm

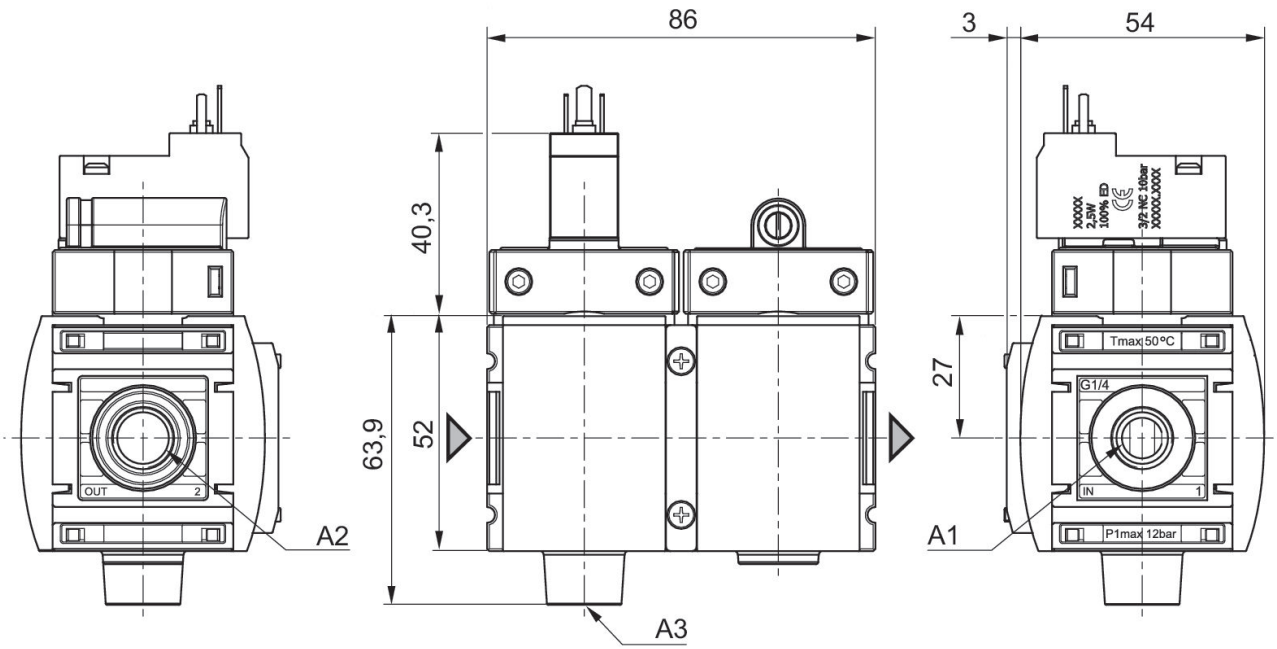

A1 = input
A2 = output
A3 = ventilation port

Flow rate characteristic, p2 = 0,05 - 7 bar

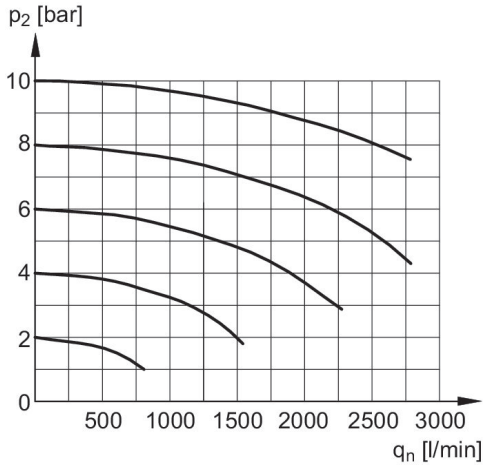

p2 = Secondary pressure
qn = Nominal flow

Secondary pressure while filling

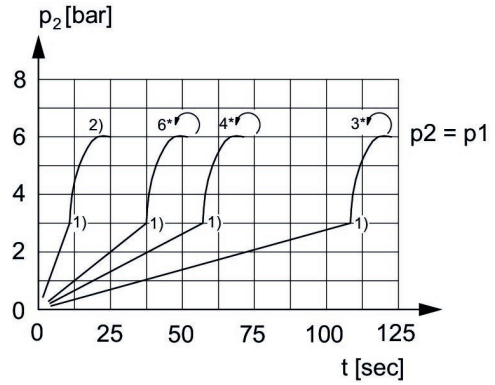

p1 = Working pressure
p2 = Secondary pressure
t = filling time, adjustable via adjustment screw (throttle)
1) Switching point: adjustable filling time, fixed change-over pressure ≈ 0.5 x p1 (50%)
2) Throttle fully opened
* Adjustment screw rotations

Accessories overview

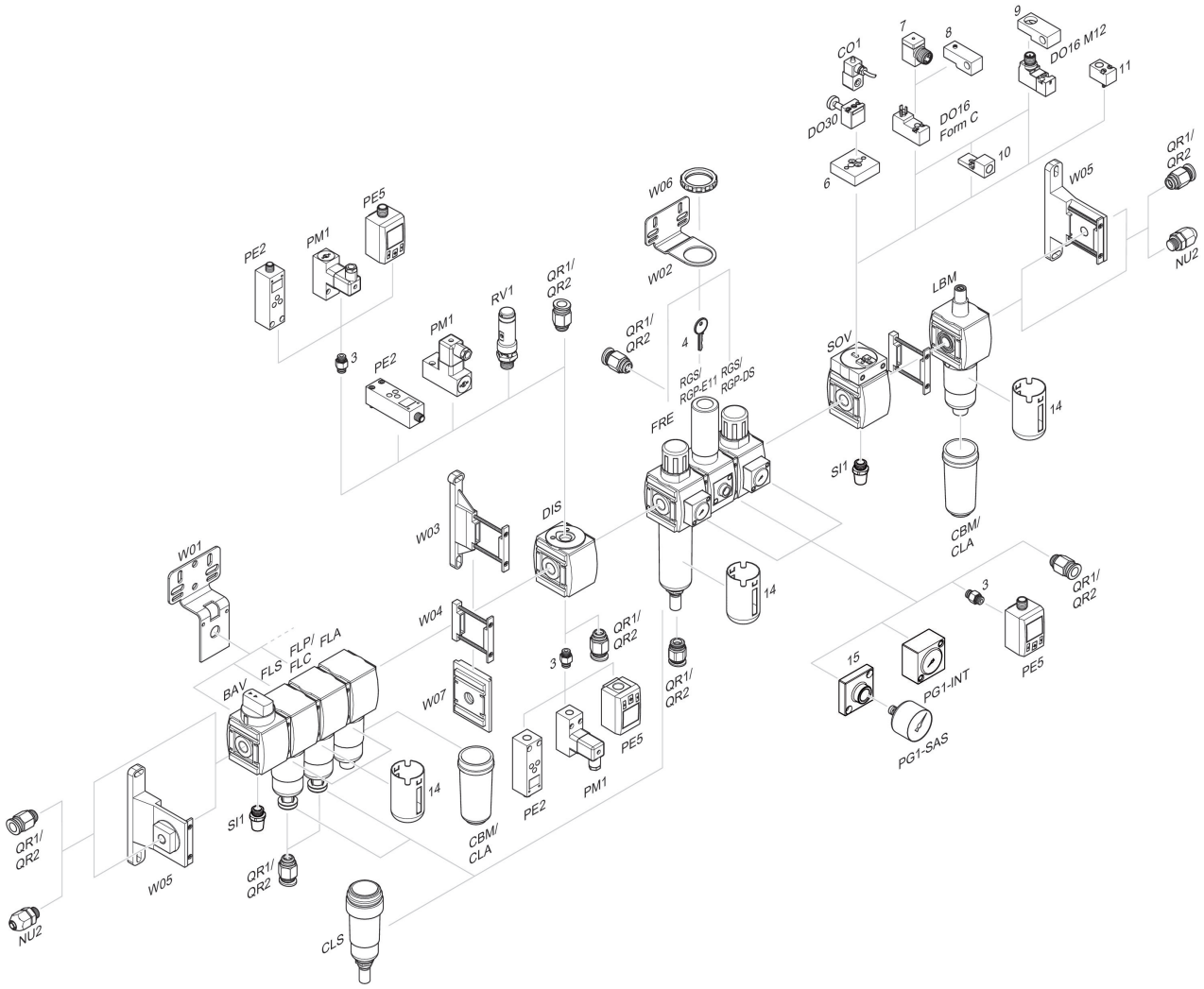

3 = Double nipple 4 = Key for E11 locking 6 = Transition plate DO30 7 = Adapter, Series CON-VP 8 = Mounting aid DO16, form C 9 = Mounting aid DO16, M12 10 = Adapter for external pilot air 11 = Adapter pneumatic operation 14 = Protective guard 15 = Transition plate for assembling a pressure gauge with connection thread G 1/8