79085200	DATA SHEET	LAPP
Valid from: 17.09.2018	EPIC® H-B 16 SGRH	

Description

- The housing standard.
- Wide choice for all applications.



General Characteristics

Series	H-B 16
Version	Surface mount base M25 / M32 (Article 79085400)
Locking	Double lever
Cable entry	1
Protection (DIN EN 60529)	IP 65 (latched)
Protection (NEMA 250, UL50E)	4, 12 (latched)
Temperature Range	-40°C to +100°C, short term up to +125°C

Materials and Surfaces

Housing	Aluminium alloy, powder-coated, grey
Bolt	Heat-treatable steel, zinc-plated
Lever	Steel, zinc-plated
Sealing	NBR

Approvals

VDE-Approval, VDE-REG.-Nr.	B437

Standard

Safety Standard	IEC 61984

We reserve all rights according to DIN ISO 16016.

Technical Drawings



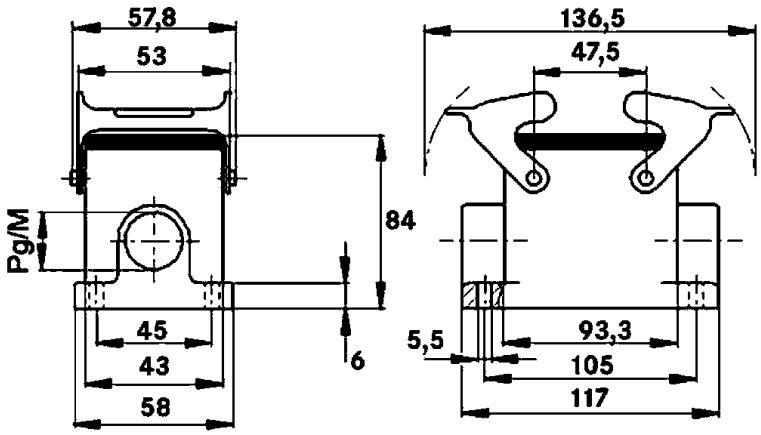

VDE

Automation

Industrial machinery and plant engineering

Mechanical resistance

Robust

Waterproof

Info

Universal, robust metal housings size H-B 16

Application range

Plant engineering
Light & sound technology
Plastics industry

Remark

Photographs are not to scale and do not represent detailed images of the respective products.

We reserve all rights according to DIN ISO 16016.