VEO

MONITORING RELAY / 1-PHASE CURRENT

V4IM35AL20

Art.Nr.: 2104402

- AC/DC current monitoring
- Multifunction
- Supply voltage 24-240 V AC/DC
- Built-in current transformer
- 2 change-over contacts
- Width 45 mm

Control elements

- Start-up suppression
- Maximum threshold
- Minimum threshold
- Function selector
- Tripping delay

Status indication

- LED U/t: Supply voltage
- LED Max: Overcurrent
- LED Min: Undercurrent
- LED Rel1: Relay status Rel1
- LED Rel2: Relay status Rel2



TECHNICAL DATA

SUPPLY CIRCUIT		
Terminals		A1-A2
Supply voltage		24 ... 240 V AC/DC
Supply voltage tolerance	AC	-15 / +10 %
	DC	-30 / +30 %
Rated frequency		16,6 ... 400 Hz or DC
Rated frequency tolerance		16,0 ... 420 Hz
Rated consumption	230 V AC	typ. 0,5 W / 0,95 VA
	24 V DC	typ. 0,45 W / 0,55 VA
Duty-cycle		100 %
Backup power time		< 20 ms
Recovery time		> 500 ms
Drop-out voltage		≥ 6 V

MEASURING CIRCUIT		
Terminals		Built-in current transformer
Measurand		current 1-phase
Measuring method		True RMS
Monitoring functions		undercurrent (U), overcurrent (O), window (W), under- and overcurrent with seperate relay outputs (MM); overcurrent with seperate relay outputs (2MAX); fault latch selectable (+L)
Measuring range		35 A AC/DC
Frequency	sinus	16,6 ... 400 Hz
	non-sinusoidal values	50 / 60 Hz (arbitrary waveform)

V4IM35AL20

Art.Nr.: 2104402

MEASURING CIRCUIT		
Thresholds	Max	10 ... 100 %
	Min	5 ... 95 %
Hysteresis		typ. 1 %

TIMING CIRCUIT		
Start-up delay	fixed	ca. 300 ms
Tripping delay	adjustable	0,1 ... 10 s
Start-up suppression	adjustable	0 ... 10 s

RANGE OF FUNCTIONS		
Functions	8	O, U, W, MM, O+L, U+L, W+L, MM+L, 2MAX, 2MAX+L

STATUS INDICATION		
Supply voltage	LED U/t (green) on	supply voltage applied
Relay status	LED Rel1 (yellow) on	output relay 1 energized
	LED Rel2 (yellow) on	output relay 2 energized
Current monitor	LED Max (red) on	indication of overcurrent
	LED Max (red) flashes	indication of tripping delay for overcurrent
	LED Min (red) on	indication of undercurrent
	LED Min (red) flashes	indication of tripping delay for undercurrent

OUTPUT CIRCUIT		
Terminals		15-16-18; 25-26-28
Kind of output		Relay
Number of contacts	change-over contact	2
Kontakt material		AgNi
Rated voltage (IEC 60947-1)		250 V
Maximum switching voltage		400 V AC
Minimum switching voltage / switching current		12 V / 10 mA
Rated current (IEC 60947-5-1)	AC-1	8 A / 250 V
	AC-15	1,5 A / 240 V (B300)
	DC-12	8 A / 24 V
	DC-13	0,1 A / 250 V
Endurance	mechanical	30 x 10^6 switching cycles
	electrical (AC-1)	100 x 10^3 switching cycles

V4IM35AL20

Art.Nr.: 2104402

OUTPUT CIRCUIT

Rated frequency of operation	with load	6/min
	without load	1200/min
Fuse rating		8 A fast acting

ACCURACY

Base accuracy	DC, AC Sinus 50/60 Hz	< 2,5 %
	AC Sinus 16,6 ... 400 Hz	< 3,0 %
	CF < 2,8 @ 50 Hz I peak max = 75A	< 5 %
Setting accuracy		< 5 % (of full scale)
Repeat accuracy		< 1 %
Temperature influence		< 0,04 % / °C
Voltage influence		-
Frequency influence		-
Damp influence	> 85 % rel. humidity	+3 % of base accuracy

ENVIRONMENTAL CONDITIONS

Ambient temperature	operation	-25 ... +60°C
	storage	-40 ... +70°C
Relative humidity		5 ... 95 %
Vibration	EN 60947-1	2 ... 13,2 Hz: 1 mm; 13,2 ... 100 Hz: 7 m/s²
Shock	EN 60947-1	150 m/s² 11 ms

GENERAL DATA

Dimensions	W × H × D	45 x 67 x 76 mm
	Ø Built-in current transformer	14,5 mm
Mounting		DIN rail (EN60715)
Mounting position		any
Housing material		PA 66, self-extinguishing plastic, class V-0
Degree of protection	housing	IP40
	terminals	IP20
Electrical connection		Screw terminal
Wire size	flexible with wire end ferrule	0,5 ... 2,5 mm² (20 AWG ... 13 AWG)
	flexible without wire end ferrule	0,5 ... 4 mm² (20 AWG ... 12 AWG)
	rigid	0,5 ... 4 mm² (20 AWG ... 12 AWG)
Stripping length		8 mm

V4IM35AL20

Art.Nr.: 2104402

GENERAL DATA		
Tightening torque		max. 1Nm
Weight		160 g

ISOLATION DATA		
Pollution degree (IEC 60947-5-1)		2
Overvoltage category (IEC 60947-5-1)		III
Rated insulation voltage (IEC 60947-1)	supply circuit / output circuit	300 V
	measuring circuit / output circuit	550 V
	supply circuit / measuring circuit	550 V
Rated impulse withstanding voltage (IEC 60947-1)	supply circuit / output circuit	6 kV
	measuring circuit / output circuit	6 kV
	supply circuit / measuring circuit	6 kV
Insulation test voltage (IEC 60947-1)	supply circuit / output circuit	3780 V
	measuring circuit / output circuit	3780 V
	supply circuit / measuring circuit	3780 V
Degree of protection	supply circuit / output circuit	protective separation
	measuring circuit / output circuit	protective separation
	supply circuit / measuring circuit	protective separation

STANDARDS	
Product standard	IEC 60947-5-1
Interference immunity	IEC 61000-6-2
Interference emission	IEC 61000-6-4
Approvals	cULus

FUNCTIONS

When the supply voltage U is applied, the output relays Rel1 and Rel2 switch into on-position and the set interval of the start-up suppression (START) begins. Changes of the measured current during this period do not affect the state of the output relays Rel1 and Rel2.

Overcurrent monitoring (O)
The adjusted maximum threshold I_{Max} must be greater than the adjusted minimum threshold I_{Min}. When the measured current exceeds the adjusted threshold I_{Max}, the set interval of the tripping delay (DELAY) begins. After the interval has expired, the output relays Rel1 and Rel2 switch into off-position. The output relays Rel1 and Rel2 switch into on-position again, when the measured current falls below the adjusted threshold I_{Min}.

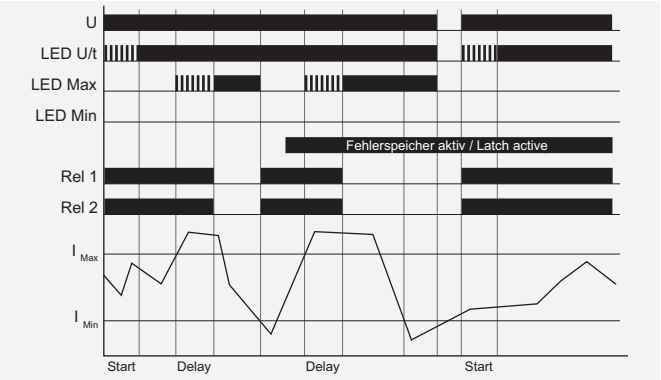

Undercurrent monitoring (U)
The adjusted maximum threshold I_{Max} must be greater than the adjusted minimum threshold I_{Min}. When the measured current falls below the adjusted threshold I_{Min}, the set interval of the tripping delay (DELAY) begins. After the interval has expired, the output relays Rel1 and Rel2 switch into off-position. The output relays Rel1 and Rel2 switch into on-position again after the measured current exceeds the adjusted threshold I_{Max}.

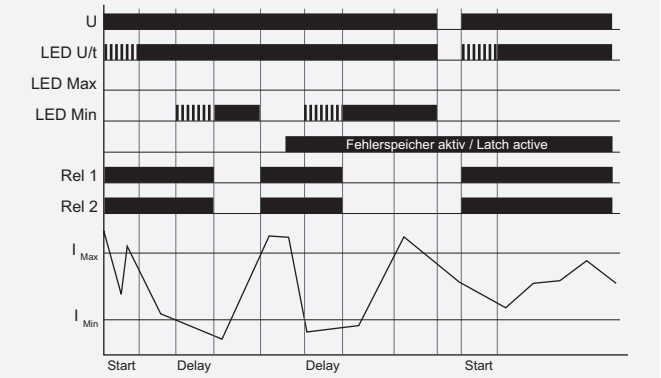

Windowfunktion (W)
The adjusted maximum threshold I_{Max} must be greater than the adjusted minimum threshold I_{Min}. When the measured current falls below the adjusted threshold I_{Min}, the set interval of the tripping delay (DELAY) begins. After the interval has expired, the output relays Rel1 and Rel2 switch into off-position. The output relays Rel1 and Rel2 switch into on-position again, as soon as the measured current exceeds the adjusted threshold I_{Min}. When the measured current exceeds the adjusted threshold I_{Max}, the set interval of the tripping delay (DELAY) begins again. After the interval has expired, the output relays Rel1 and Rel2 switch into off-position. The output relays Rel1 and Rel2 switch into on-position again, as soon as the measured current falls below the adjusted threshold I_{Max}.

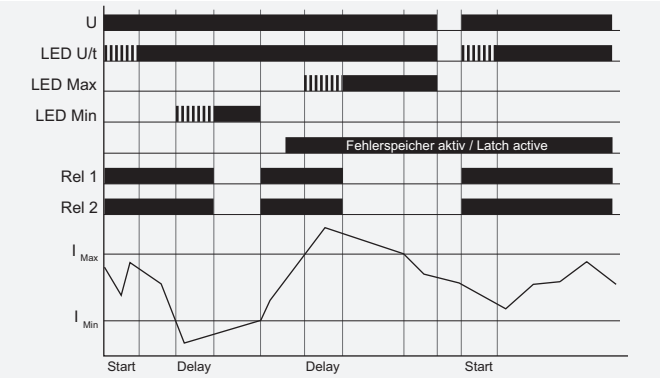

FUNCTIONS

Maximum and minimum monitoring (MM)
The adjusted maximum threshold I_{Max} must be greater than the adjusted minimum threshold I_{Min} . When the measured current exceeds the adjusted threshold I_{Max} , the set interval of the tripping delay (DELAY) begins. After the interval has expired, the output relay Rel1 switches into off-position. The output relay Rel1 switches into on-position again, as soon as the measured current falls below the adjusted threshold I_{Max} . When the measured current falls below the adjusted threshold I_{Min} , the set interval of the tripping delay (DELAY) begins. After the interval has expired, the output relay Rel2 switches into off-position. The output relay Rel2 switches into on-position again, as soon as the measured current exceeds the adjusted threshold I_{Min} .

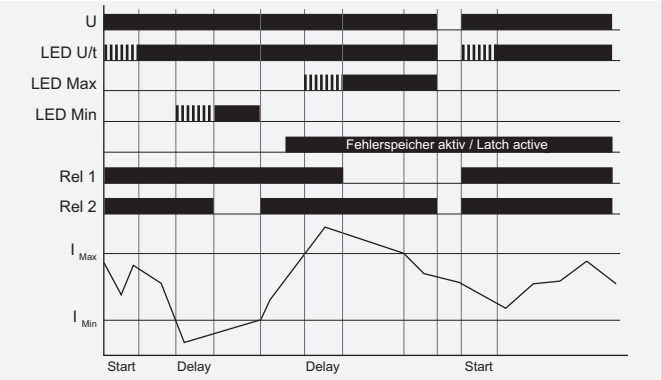

Maximum monitoring (2MAX)
The adjusted maximum threshold I_{Max} must be greater than the adjusted minimum threshold I_{Min}. When the measured current exceeds the adjusted threshold I_{Max}, the set interval of the tripping delay (Del_B) begins. After the interval has expired, the output relay Rel_2 switches into off-position (state of output relay 10). When the measured true power exceeds the adjusted threshold Th_A, the set interval of the tripping delay (Del_A) begins. After the interval has expired, the output relay Rel_1 switches into off-position (state of output relay 00). As soon as
the measured true power exceeds the corresponding threshold (Th_A or Th_B), the output relays Rel_1 or Rel_2 switches into on-position again (state of output relay 11).

Fault latch
If the fault latch is activated and a failure has occurred, this failure is stored. The failure can only be reset by interrupting the supply voltage. After resetting the failure and re-applying the supply voltage, the output relays Rel1 and Rel2 switch into on-position and the measuring cycle begins with the set interval of the start-up suppression (START).

CONNECTIONS

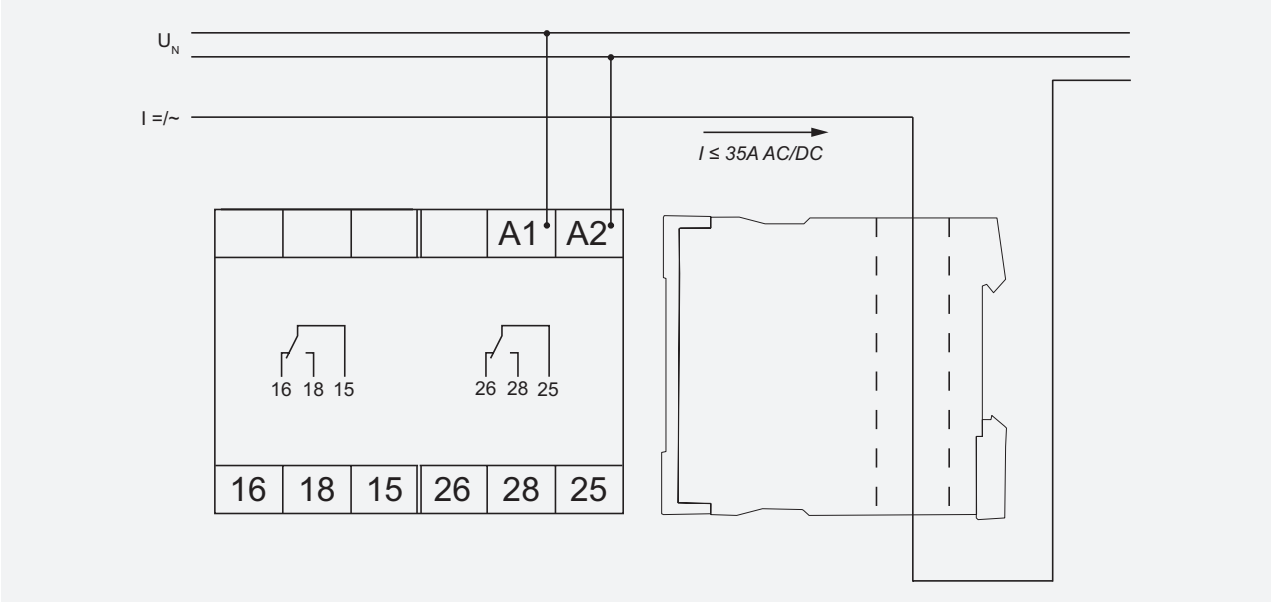

V4IM35AL20

Art.Nr.: 2104402

DIMENSIONS

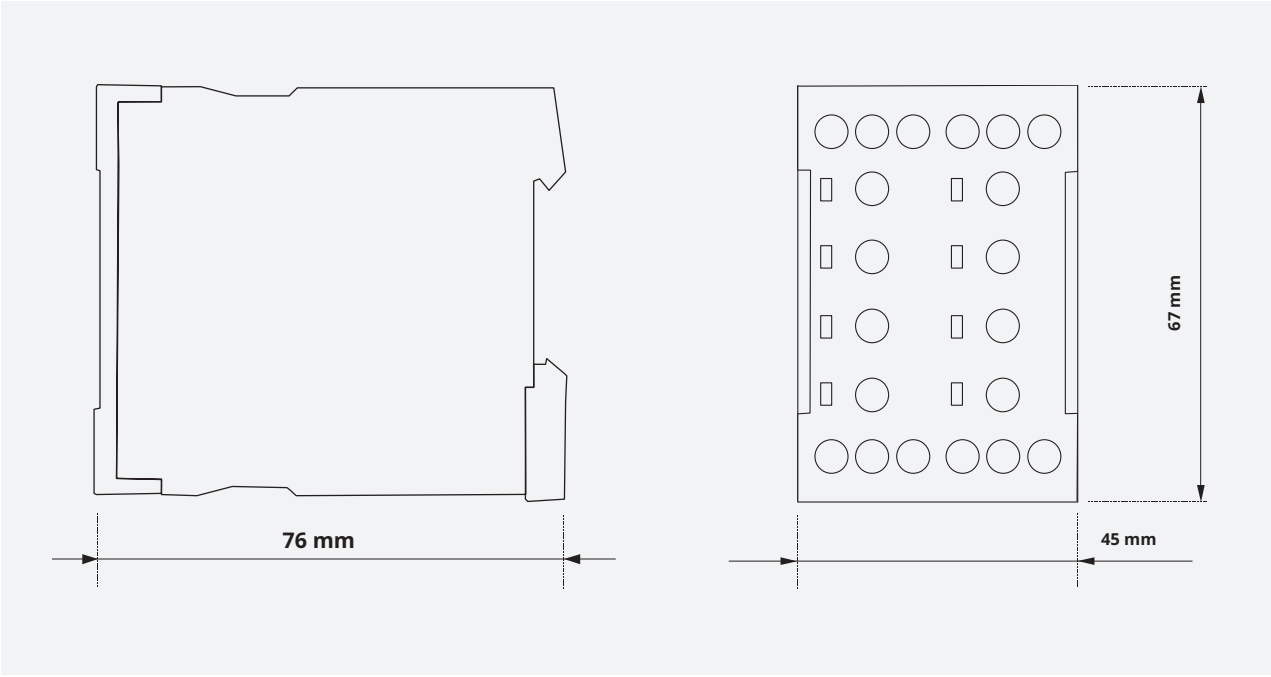

CONTACT

TELE Haase Steuergeräte Ges.m.b.H.

Vorarlberger Allee 38
1230 Vienna
Austria

CALL US +43 / 1 / 614 74 - 0

ONLINE SUPPORT info@tele-online.com