Air preparation unit, 2-part, Series AS1-ACC

R412027664

General series information
AVENTICS Series AS1 Air Preparation Units

- The AVENTICS Series AS1 is a modular, versatile maintenance unit for universal application. This Series offers compact dimensions, is highly efficient, lightweight and easy-to-use. The AVENTICS Series AS guarantees reliability, safety, and efficiency with a simplified assembly and maintenance efforts.



Technical data

Industry	Industrial
Parts	Air preparation units
Components	Shut-off valve Filter pressure regulator
Reservoir	reservoir, polycarbonate, without protective guard
Port	G 1/4
Nominal flow Qn	1000 l/min
Filter porosity	5 µm
Condensate drain	fully automatic, open without pressure
Pressure gauge	With integrated pressure gauge
Working pressure min.	1.5 bar
Working pressure max	12 bar
Min. ambient temperature	-10 °C
Max. ambient temperature	50 °C
Air supply	left
Regulation range min.	0.5 bar
Regulation range max.	8 bar
Lock type	not lockable
Type	2-part

Type	Can be assembled into blocks
Pressure supply	single
Mounting orientation	vertical
Regulator type	Diaphragm-type pressure regulator
Regulator function	with relieving air exhaust
Filter element	exchangeable
Filter reservoir volume	16 cm³
Max. achievable compressed air class acc. to ISO 8573-1:2010	6 : 7 : -
Medium	Compressed air Neutral gases
Weight	0.839 kg

Material

Housing material	Polyamide
Seal material	Acrylonitrile butadiene rubber
Material front plate	Acrylonitrile butadiene styrene
Material reservoir	Polycarbonate
Material filter insert	Cellpor
Part No.	R412027664

Technical information

The pressure dew point must be at least 15 °C less than ambient and medium temperature and may not exceed 3 °C.

Note: Polycarbonate reservoirs are susceptible to solvents, supplementary information can be found at "Customer information".

Also suitable for separation of fluid oil or water due to the design.

Nominal flow Qn with secondary pressure p2 = 6 bar at Δp = 1 bar

Dimensions in mm

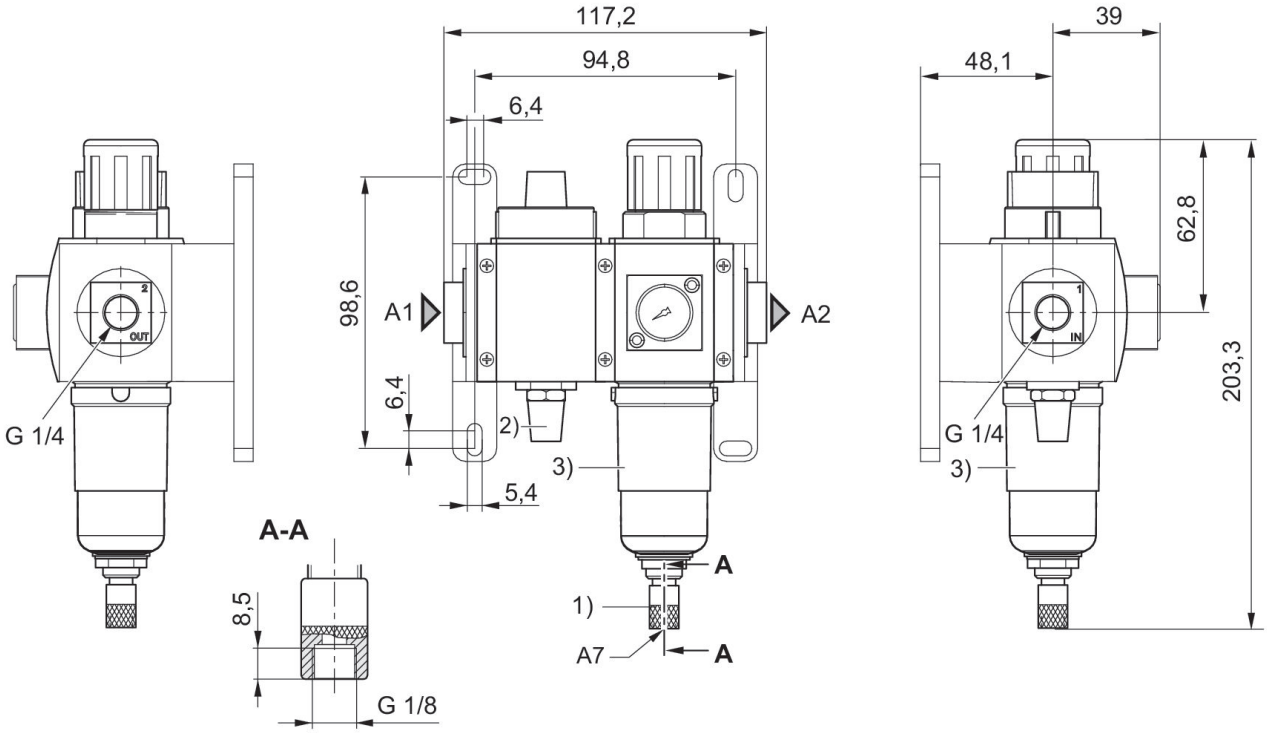

A1 = input
A2 = output
A7 = condensate drain
1) Fully automatic condensate drain
2) Silencer
3) Reservoir: polycarbonate

Block diagram

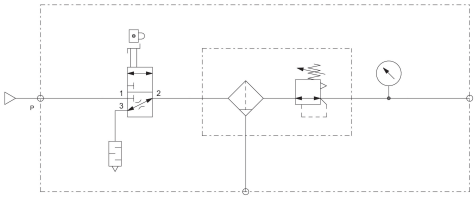

Accessories overview

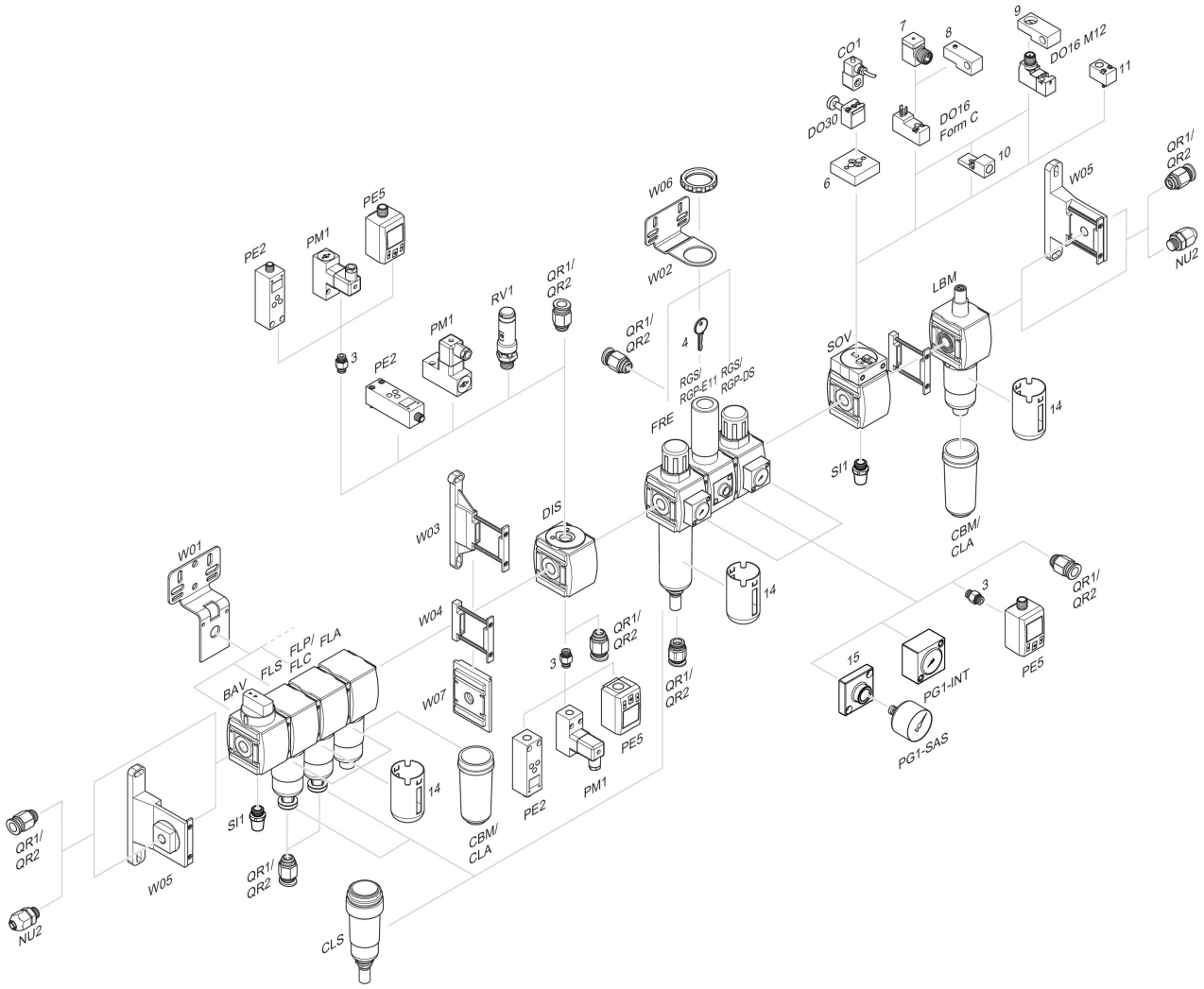

3 = Double nipple 4 = Key for E11 locking 6 = Transition plate DO30 7 = Adapter, Series CON-VP 8 = Mounting aid DO16, form C 9 = Mounting aid DO16, M12 10 = Adapter for external pilot air 11 = Adapter pneumatic operation 14 = Protective guard 15 = Transition plate for assembling a pressure gauge with connection thread G 1/8