ir33 Universale

electronic controller

CAREL



ENG User manual

LEGGI E CONSERVA QUESTE ISTRUZIONI

READ AND SAVE THESE INSTRUCTIONS

Technology & Evolution

WARNINGS



CAREL bases the development of its products on decades of experience in HVAC, on the continuous investments in technological innovations to products, procedures and strict quality processes with in-circuit and functional testing on 100% of its products, and on the most innovative production technology available on the market. CAREL and its subsidiaries nonetheless cannot guarantee that all the aspects of the product and the software included with the product respond to the requirements of the final application, despite the product being developed according to start-of-the-art techniques. The customer (manufacturer, developer or installer of the final equipment) accepts all liability and risk relating to the configuration of the product in order to reach the expected results in relation to the specific final installation and/or equipment. CAREL may, based on specific agreements, acts as a consultant for the positive commissioning of the final unit/application, however in no case does it accept liability for the correct operation of the final equipment/system.
The CAREL product is a state-of-the-art product, whose operation is specified in the technical documentation supplied with the product or can be downloaded, even prior to purchase, from the website www.carel.com.
Each CAREL product, in relation to its advanced level of technology, requires setup / configuration / programming / commissioning to be able to operate in the best possible way for the specific application. The failure to complete such operations, which are required/indicated in the user manual, may cause the final product to malfunction; CAREL accepts no liability in such cases.
Only qualified personnel may install or carry out technical service on the product.
The customer must only use the product in the manner described in the documentation relating to the product.
In addition to observing any further warnings described in this manual, the following warnings must be heeded for all CAREL products:

- prevent the electronic circuits from getting wet. Rain, humidity and all types of liquids or condensate contain corrosive minerals that may damage the electronic circuits. In any case, the product should be used or stored in environments that comply with the temperature and humidity limits specified in the manual;
- do not install the device in particularly hot environments. Too high temperatures may reduce the life of electronic devices, damage them and deform or melt the plastic parts. In any case, the product should be used or stored in environments that comply with the temperature and humidity limits specified in the manual;
- do not attempt to open the device in any way other than described in the manual;
- do not drop, hit or shake the device, as the internal circuits and mechanisms may be irreparably damaged;
- do not use corrosive chemicals, solvents or aggressive detergents to clean the device;
- do not use the product for applications other than those specified in the technical manual.

All of the above suggestions likewise apply to the controllers, serial boards, programming keys or any other accessory in the CAREL product portfolio.

CAREL adopts a policy of continual development. Consequently, CAREL reserves the right to make changes and improvements to any product described in this document without prior warning.

The technical specifications shown in the manual may be changed without prior warning.

The liability of CAREL in relation to its products is specified in the CAREL general contract conditions, available on the website www.carel.com and/or by specific agreements with customers; specifically, to the extent where allowed by applicable legislation, in no case will CAREL, its employees or subsidiaries be liable for any lost earnings or sales, losses of data and information, costs of replacement goods or services, damage to things or people, downtime or any direct, indirect, incidental, actual, punitive, exemplary, special or consequential damage of any kind whatsoever, whether contractual, extra-contractual or due to negligence, or any other liabilities deriving from the installation, use or impossibility to use the product, even if CAREL or its subsidiaries are warned of the possibility of such damage.

DISPOSAL

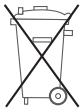

The product is made from metal parts and plastic parts.
In reference to European Union directive 2002/96/EC issued on 27 January 2003 and the related national legislation, please note that:

1. WEEE cannot be disposed of as municipal waste and such waste must be collected and disposed of separately;
2. the public or private waste collection systems defined by local legislation must be used. In addition, the equipment can be returned to the distributor at the end of its working life when buying new equipment.
3. the equipment may contain hazardous substances: the improper use or incorrect disposal of such may have negative effects on human health and on the environment;
4. the symbol (crossed-out wheeled bin) shown on the product or on the packaging and on the instruction sheet indicates that the equipment has been introduced onto the market after 13 August 2005 and that it must be disposed of separately;
5. in the event of illegal disposal of electrical and electronic waste, the penalties are specified by local waste disposal legislation.

Content

1. INTRODUCTION 7

1.1 Models ... 7
1.2 Functions and main characteristics ... 8

2. INSTALLATION 10

2.1 IR33: panel mounting and dimensions ... 10
2.2 DN33: DIN rail mounting and dimensions ... 10
2.3 IR33 Universal wiring diagrams ... 11
2.4 DN33 Universal wiring diagrams ... 12
2.5 Connection diagrams ... 13
2.6 Installation ... 14
2.7 Programming key (copy set-up) ... 14

3. USER INTERFACE 15

3.1 Display ... 15
3.2 Keypad ... 16
3.3 Programming ... 16
3.4 Example: setting the current date/time and the on/off times ... 18
3.5 Using the remote control (accessory) ... 20

4. COMMISSIONING 22

4.1 Configuration ... 22
4.2 Preparing for operation ... 22
4.3 Switching the controller On/Off ... 22

5. FUNCTIONS 23

5.1 Probes (analogue inputs) ... 23
5.2 Standard operating modes (parameters St1,St2,c0,P1,P2,P3) ... 23
5.3 Validity of control parameters (parameters St1,St2,P1,P2,P3) ... 26
5.4 Selecting the special operating mode ... 26
5.5 Special operating modes ... 26
5.6 Additional remarks on special operation ... 29
5.7 Outputs and inputs ... 30

6. CONTROL 32

6.1 Type of control (parameter c32) ... 32
6.2 ti_PID, td_PID (parameters c62,c63) ... 32
6.3 Auto-Tuning (parameter c64) ... 32
6.4 Operating cycle ... 33
6.5 Operation with probe 2 ... 33

7. TABLE OF PARAMETERS 37

7.1 Variables only accessible via serial connection ... 40

8. ALARMS 41

8.1 Types of alarms ... 41
8.2 Alarms with manual reset ... 41
8.3 Display alarm queue ... 41
8.4 Table of alarms ... 42
8.5 Alarm parameters ... 42

9. TECHNICAL SPECIFICATIONS AND PRODUCT CODES 44

9.1 Technical specifications ... 44
9.2 Cleaning the controller ... 45
9.3 Product codes ... 45
9.4 Software revisions ... 46

1. INTRODUCTION

IR33-DN33 Universal is a series of controllers designed for controlling the temperature in air-conditioning, refrigeration and heating units. The models differ according to the type of power supply (115 to 230 Vac or 12 to 24 Vac, 12 to 30 Vdc) and the outputs, which based on the model may be one, two or four relays, one or four PWM outputs for controlling external solid state relays (SSR), one or two relays plus one or two 0 to 10 Vdc analogue outputs (AO) respectively. The models described in this user manual are suitable for controlling the temperature using four types of probes: NTC, NTC-HT (high temperature), PTC or PT1000. The type of control can be set as ON/OFF (proportional) or proportional, integral and derivative (PID). A second probe can be connected for differential control or freecooling/freeheating, or for compensation based on the outside temperature. The range includes models for panel installation (IR33), with IP65 index of protection, and for DIN rail mounting (DN33). To simplify wiring, all the models are fitted with plug-in terminals. The controllers can be connected via a network to supervisory and telemaintenance systems.

The accessories available include:

- computer-based programming tool;
- remote control for operation and programming;
- programming key, with battery;
- programming key, with 230 Vac power supply;
- RS485 serial card;
- RS485 serial card, with possibility of reversing the Rx-Tx terminals;
- module for converting the PWM signal to a 0 to 10 Vdc or 4 to 20 mA analogue signal;
- module for converting the PWM signal to an ON/OFF relay signal.

1.1 Models

The following table describes the models and the main characteristics.

IR33-DN33 UNIVERSAL

TYPE	CODE		Characteristics
	flush mount	DIN rail mounting	
1 relay	IR33V7HR20	DN33V7HR20	2 NTC/PTC/PT1000 input, 1 relay, buzzer, IR receiver, 115 to 230V
	IR33V7HB20	DN33V7HB20	2 NTC/PTC/PT1000 input, 1 relay , buzzer, IR receiver, RTC, 115 to 230V
	IR33V7LR20	DN33V7LR20	2 NTC/PTC/PT1000 input, 1 relay , buzzer, IR receiver, 12 to 24V
2 relays	IR33W7HR20	DN33W7HR20	2 NTC/PTC/PT1000 input, 2 relays, buzzer, IR receiver, 115 to 230V
	IR33W7HB20	DN33W7HB20	2 NTC/PTC/PT1000 input, 2 relays, buzzer , IR receiver, RTC, 115 to 230V
	IR33W7LR20	DN33W7LR20	2 NTC/PTC/PT1000 input, 2 relays, buzzer, IR receiver, 12 to 24V
4 relays	IR33Z7HR20	DN33Z7HR20	2 NTC/PTC/PT1000 input, 4 relays, buzzer, IR receiver, 115 to 230V
	IR33Z7HB20	DN33Z7HB20	2 NTC/PTC/PT1000 input, 4 relays , buzzer, IR receiver, RTC, 115 to 230V
	IR33Z7LR20	DN33Z7LR20	2 NTC/PTC/PT1000 input, 4 relays , buzzer, IR receiver, 12 to 24V
4 SSR	IR33A7HR20	DN33A7HR20	2 NTC/PTC/PT1000 input, 4 SSR, buzzer, IR receiver, 115 to 230V
	IR33A7HB20	DN33A7HB20	2 NTC/PTC/PT1000 input, 4 SSR, buzzer, IR receiver, RTC, 115 to 230V
	IR33A7LR20	DN33A7LR20	2 NTC/PTC/PT1000 input, 4 SSR, buzzer, IR receiver, 12 to 24V
1 SSR	IR33D7HR20	-	2 NTC/PTC/PT1000 input, 1 SSR, buzzer, IR receiver, 115 to 230V
	IR33D7HB20	-	2 NTC/PTC/PT1000 input, 1 SSR, buzzer, IR receiver, RTC, 115 to 230V
	IR33D7LR20	-	2 NTC/PTC/PT1000 input, 1 SSR, buzzer, IR receiver, 12 to 24V
1 relay +1 0 - 10Vdc	IR33B7HR20	DN33B7HR20	2 NTC/PTC/PT1000 input, 1 relay + 1 AO, buzzer, IR receiver, 115 to 230V
	IR33B7HB20	DN33B7HB20	2 NTC/PTC/PT1000 input, 1 relay + 1 AO, buzzer, IR receiver, RTC, 115 to 230V
	IR33B7LR20	DN33B7LR20	2 NTC/PTC/PT1000 input, 1 relay + 1 AO, buzzer, IR receiver, 12 to 24V
2 rel. +2 x 0 -10Vdc	IR33E7HR20	DN33E7HR20	2 NTC/PTC/PT1000 input, 2 relays + 2 AO, buzzer, IR receiver, 115 to 230V
	IR33E7HB20	DN33E7HB20	2 NTC/PTC/PT1000 input, 2 relays + 2 AO, buzzer, IR receiver, RTC, 115 to 230V
	IR33E7LR20	DN33E7LR20	2 NTC/PTC/PT1000 input, 2 relays + 2 AO, buzzer, IR receiver, 12 to 24V

Tab. 1. a

RTC = Real Time Clock

Note that the type of outputs can be identified from the code:

- the fifth letter V/W/Z corresponds to 1,2,4 relay outputs respectively;
- the fifth letter D/A corresponds to 1 or 4 PWM outputs respectively;
- the fifth letter B/E corresponds to 1 or 2 relays and 1 or 2 x 0 to 10 Vdc analogue outputs respectively.

The type of power supply can also be identified:

- the seventh letter H corresponds to the 115 to 230 Vac power supply;
- the seventh letter L indicates the 12 to 24 Vac or 12 to 30Vdc power supply.

1.2 Functions and main characteristics

The IR33/DN33 controllers feature two main types of operation: "direct" and "reverse", based on the value measured. In "direct" operation, the output is activated if the value measured exceeds the set point plus a differential, and thus aims to keep the value below a certain level (typically used in refrigeration systems). Vice-versa, in "reverse" operation the output is activated when the temperature falls below the set point plus a differential (typically used in heating systems).
There are nine preset operating modes in which the installer can choose the set point and the activation differential.
In "special" operating mode, the exact activation point and deactivation and the control logic, "direct" or "reverse", can both be set, guaranteeing significant flexibility. Finally, automatic cycles can be programmed, called "operating cycles", used for example in processes where the temperature must remain above a certain value for a minimum time (pasteurisation). An operating cycle is defined by five time intervals in which the temperature must reach a certain set point. The operating cycle is activated on the keypad, via digital input or automatically on the models with RTC. On all models, it runs for the set time , thanks to the internal timer. The remote control, an accessory available for all the controllers, has the same buttons as the controller interface, and in addition can directly display the most frequently used parameters. Based on the model of controller, the output activated may be a relay, a PWM signal for solid state relays (SSR) or a voltage that increases linearly from 0 to 10 Vdc. The PWM output can also be converted, using the following modules:

- CONV0/10A0: conversion from PWM output for SSR to a linear 0 to 10 Vdc or 4 to 20 mA analogue signal;
- CONONOFF0: conversion from PWM output for SSR to an ON/OFF relay output.

Below is a description of the accessories for the IR33/DN33 Universal:

ComTool programming tool
(downloadable from http://ksa.carel.com)
With this useful tool, the controller can be programmed from any PC, saving the different configurations to files that can be loaded during the final programming stage, creating custom sets of parameters for faster programming and setting different user profiles with access protected by password. The PC must be fitted with the USB/RS485 converter code CVSTDUMOR0.



Fig. 1. a

Remote control (code IRTRUES000)
Used to directly access the main functions, the main configuration parameters and to program the controller from a distance, using a group of buttons that exactly replicate the keypad on the controller.

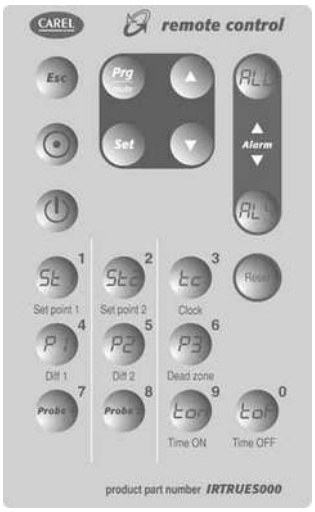

Fig. 1. b

Programming key (code IROPZKEY00) and programming key with power supply (code IROPZKEYA0)
The keys can be used to quickly program the controllers, even when not connected to the powered supply, reducing the risk of errors. These accessories also allow fast and effective technical service, and can be used for programming the controllers in just a few seconds, also during the testing phase.



Fig. 1. c

RS485 serial interface (code IROPZ48500 & IROPZ485S0)
These fit directly into the connector that normally is used for programming via key, and allow connection to the PlantVisor supervisory system. These options have been designed to remain outside of the controller and consequently the connection to the PlantVisor supervisory system can be installed at any time, even subsequently, if the system requires. Model IROPZ485S0 features a microprocessor and can automatically recognise the TxRx+ and TxRx- signals (possibility to reverse the connection).



Fig. 1. d

RS485 card (code IROPZSER30)

Used to connect the DN33 via the RS485 serial network to the PlantVisor supervisory system.



Fig. 1. d

Analogue output module (code CONV0/10A0)
Converts the PWM signal for solid state relays (SSR) to a standard 0 to 10 Vdc or 4 to 20 mA signal. For models IR/DN33A7**** and IR33D7**** only.



Fig. 1. e

ON/OFF module (code CONVONOFF0)
This module converts a PWM signal for solid state relays to an ON/OFF relay output. Useful when the IR/DN33A7**** or IR33D7**** controller needs to be used with one or more outputs to control solid state relays, and at the same time one or more ON/OFF outputs are required for the control functions or alarms.



Fig. 1. f

2. INSTALLATION

2.1 IR33: panel mounting and dimensions

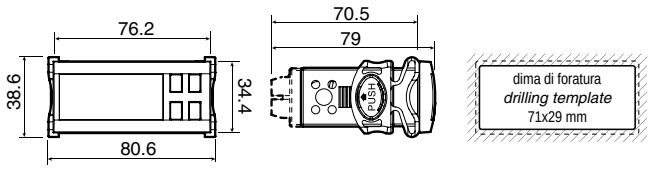

Fig. 2. a

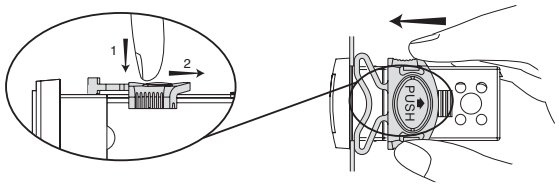

Fig. 2. b

2.1.1 IR33 optional connections

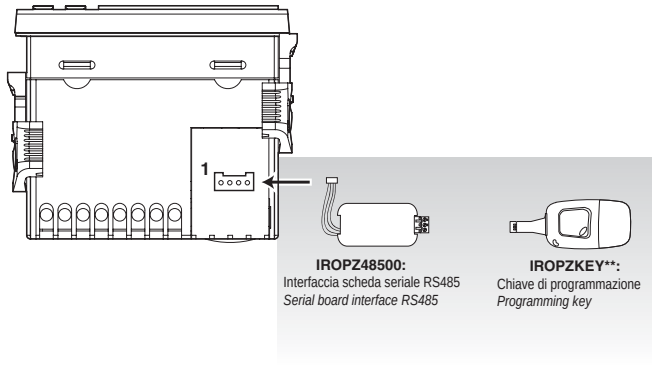

Fig. 2. c

2.2 DN33: DIN rail mounting and dimensions

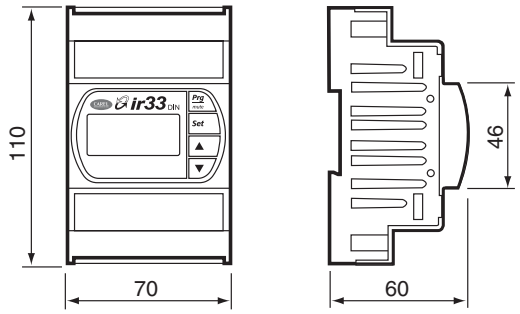

Fig. 2. d

2.2.1 DN33 optional connections

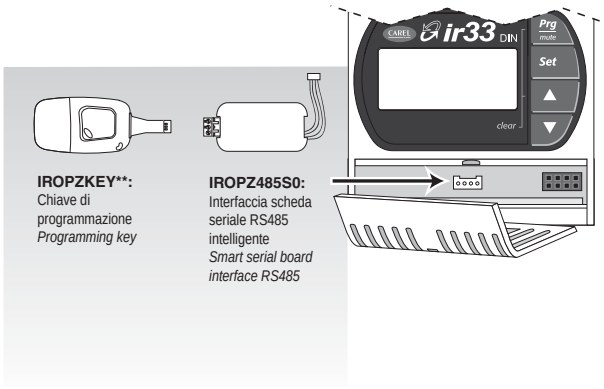

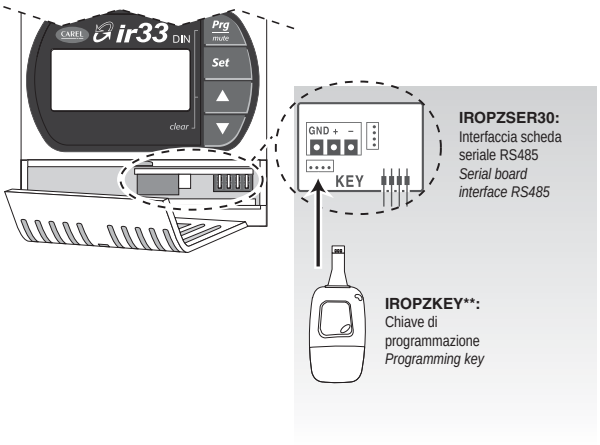

Fig. 2. e

2.3 IR33 Universal wiring diagrams

The models with 115 to 230 Vac and 12 to 24 Vac power supply have the same wiring diagram. In the 230 Vac models, the line (L) is connected to terminal 6 and the neutral (N) to terminal 7.

Relays

IR33V7HR20 / IR33V7HB20/ IR33V7LR20

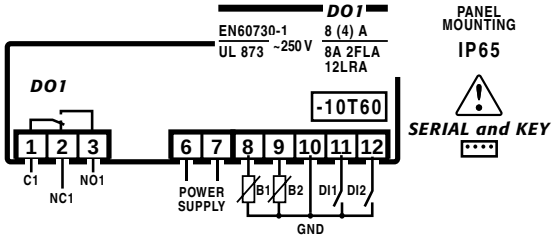

Fig. 2. f

IR33W7HR20 / IR33W7HB20 / IR33W7LR20

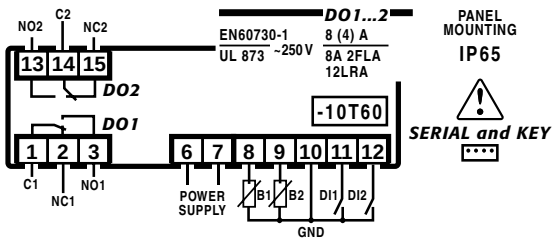

Fig. 2. g

IR33Z7HR20 / IR33Z7HB20 / IR33Z7LR20

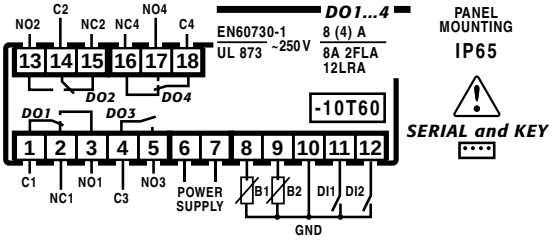

Fig. 2. h

SSR

IR33D7HR20 / IR33D7HB20 / IR33D7LR20

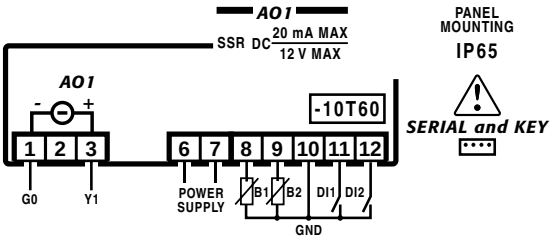

Fig. 2. i

IR33A7HR20 / IR33A7HB20 / IR33A7LR20

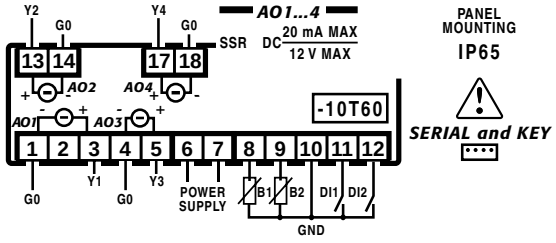

Fig. 2. j

Relays + 0 to 10V

IR33B7HR20 / IR33B7HB20 / IR33B7LR20

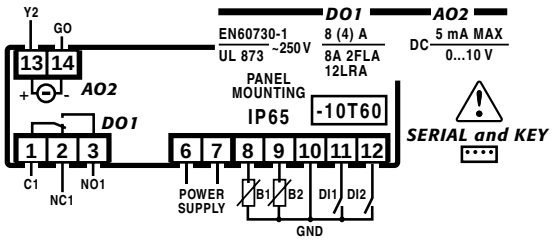

Fig. 2. k

IR33E7HR20 / IR33E7HB20 / IR33E7LR20

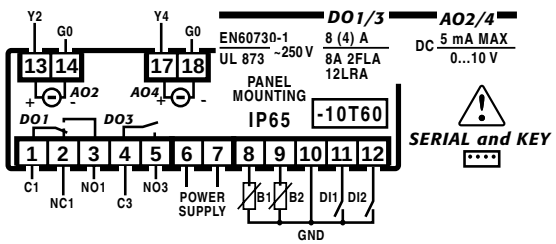

Fig. 2. l

Key

POWER SUPPLY	Power supply
DO1/DO2/DO3/DO4	Digital output 1/2/3/4 (relays 1/2/3/4)
AO1/AO2/AO3/AO4	PWM output for controlling external solid state relays (SSR) or 0 to 10 Vdc analogue output
G0	PWM or 0 to 10 Vdc analogue output reference
Y1/Y2/Y3/Y4	PWM or 0 to 10 Vdc analogue output signal
C/NC/NO	Common/Normally closed/Normally open (relay output)
B1/B2	Probe 1/Probe 2
DI1/DI2	Digital input 1/ Digital input 2

2.4 DN33 Universal wiring diagrams

For models with the same type of outputs, only the wiring diagram of the model with the most outputs has been shown (models : "Z", "A", "E").

DN33V7HR20 / DN33V7HB20
DN33W7HR20 / DN33W7HB20
DN33Z7HR20 / DN33Z7HB20

Relays

DN33V7LR20 / DN33W7LR20 / DN33Z7LR20

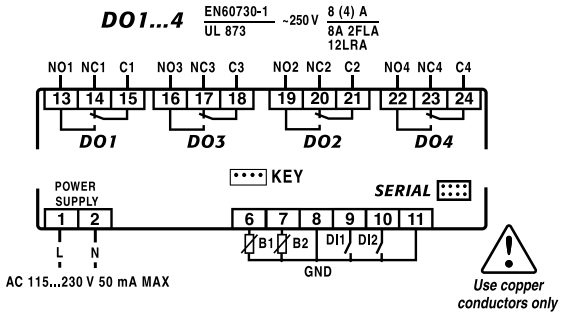

Fig. 2. m

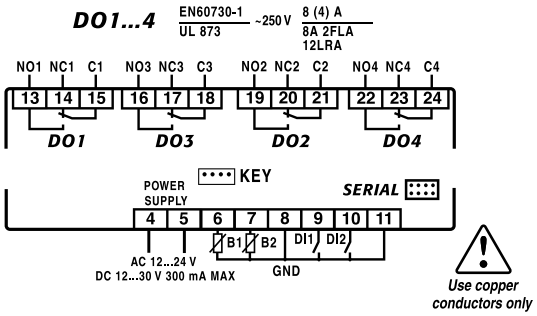

Fig. 2. n

DN33A7HR20 / DN33A7HB20

SSR

DN33A7LR20

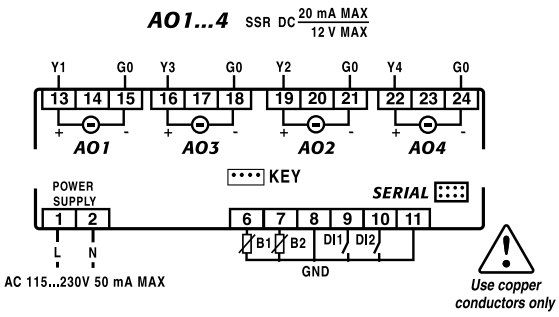

Fig. 2. o

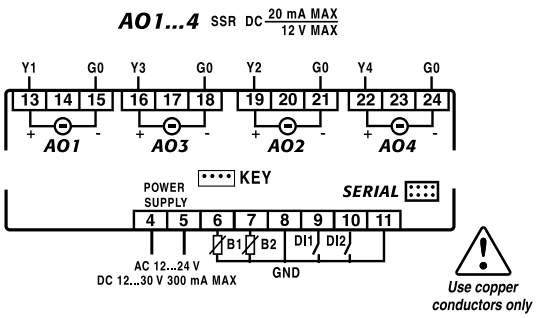

Fig. 2. p

DN33B7HR20 / DN33B7HB20
DN33E7HR20 / DN33E7HB20

Relays + 0 to 10V

DN33B7LR20
DN33E7LR20

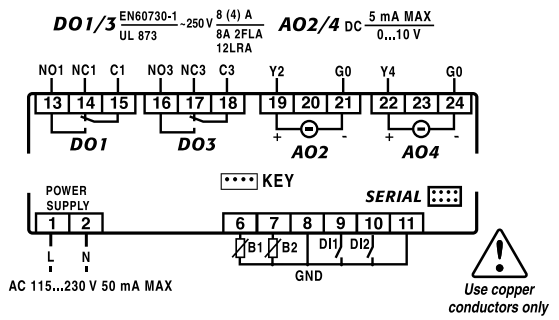

Fig. 2. q

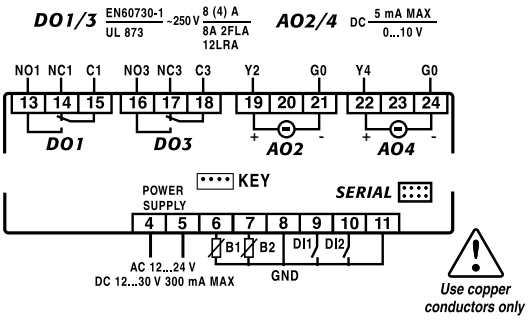

Fig. 2. r

Key	
POWER SUPPLY	Power supply
DO1/DO2/DO3/DO4	Digital output 1/2/3/4 (relays 1/2/3/4)
AO1/AO2/AO3/AO4	PWM output for controlling external solid state relays (SSR) or 0 to 10 Vdc analogue output
G0	PWM or 0 to 10 Vdc analogue output reference
Y1/Y2/Y3/Y4	PWM or 0 to 10 Vdc analogue output signal
C/NC/NO	Common/Normally closed/Normally open (relay output)
B1/B2	Probe 1/Probe 2
DI1/DI2	Digital input 1/ Digital input 2

2.5 Connection diagrams

2.5.1 Connection to the CONV0/10A0 and CONVONOFF0 modules (accessories)

The CONV0/10A0 and CONVONOFF0 modules convert a PWM output for SSR to a 0 to 10 Vdc analogue output and ON/OFF relay output respectively. Below is an example of an application that uses model DN33A7LR20. Note that the same controller can thus have 3 different types of outputs. If only the 0 to 10 Vdc analogue output and the relay output are required, model DN33E7LR20 can be used; the wiring diagram is shown below.

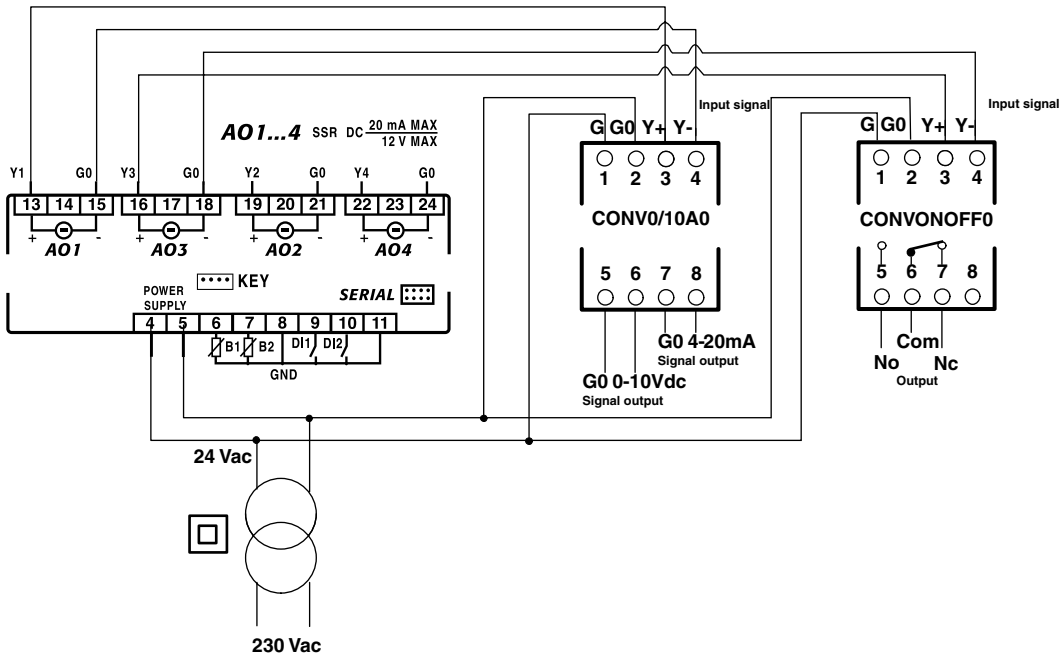

Fig. 2. s

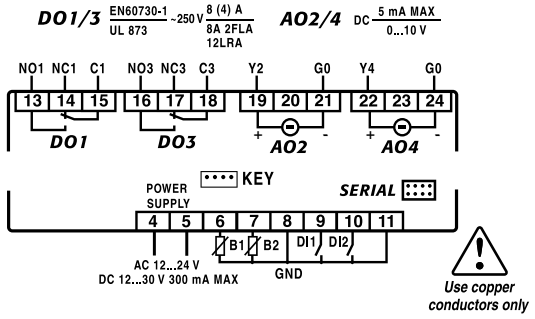

Fig. 2. t

Key

CONV0/10A0 & CONVONOFF0 modules		CONV0/10A0 module		CONVONOFF0 module	
Terminal	Description	Terminal	Description	Terminal	Description
1	24 Vac power supply	5	0 to 10 Vdc output reference	5	Normally open
2	Power supply reference	6	0 to 10 Vdc output	6	Common
3	PWM control signal (+)	7	4 to 20 mA output reference	7	Normally closed
4	PWM control signal (-)	8	4 to 20 mA output	8	Not connected

The control signal to terminals 3 & 4 on the CONV0/10VA0 and CONVONOFF modules is optically-isolated. This means that the power supply (G, G0) can be in common with the power supply to the controller.

2.6 Installation

To install the controller, proceed as follows, with reference to the wiring diagrams:

1) connect the probes and power supply: the probes can be installed up to a maximum distance of 100 m from the controller, using shielded cables with a minimum cross-section of 1 mm^2. To improve immunity to disturbance, use probes with shielded cables (connect only one end of the shield to the earth on the electrical panel).
2) Program the controller: see the chapter "User interface".
3) Connect the actuators: the actuators should only be connected after having programmed the controller. Carefully check the maximum relay capacities, indicated in "technical specifications".
4) Serial network connection: if connection to the supervisor network is available using the relevant serial cards (IROPZ485*0 for IR33 & IROPZSER30 for DN33), make sure the system is earthed. Specifically, the secondary of the transformers that supply the controllers must not be earthed. If connection to a transformer with earthed secondary winding is required, an insulating transformer must be installed in between. A series of controllers can be connected to the same insulating transformer, nevertheless it is recommended to use a separate insulating transformer for each controller.

⚠ Avoid installing the controller in environments with the following characteristics:
- relative humidity over 90% non-condensing;
- heavy vibrations or knocks;
- exposure to continuous jets of water;
- exposure to aggressive and polluting atmospheric agents (e.g.: sulphur and ammonia gases, saline mist, smoke) which may cause corrosion and/or oxidation;
- high magnetic and/or radio frequency interference (e.g. do not installe near transmitting antennas);
- exposure to direct sunlight and atmospheric agents in general.

⚠ The following warnings must be observed when connecting the controllers:
- incorrect connection of the power supply may seriously damage the system;
- use cable ends that are suitable for the terminals. Loosen every screw and fit the cable end, next tighten the screws and gently pull the cables to check their tightness;
- separate as much as possible (at least 3 cm) the probe and digital input cables from inductive loads and power cables, to avoid any electromagnetic disturbance. Never lay power and probe cables in the same cable conduits (including those for the electrical panels);
- do not install the probe cables in the immediate vicinity of power devices (contactors, circuit breakers or the like). Reduce the length of the sensor cables as much as possible, and avoid spirals around power devices;
- avoid supplying the controller directly from the main panel power supply if also supplying power to other devices, such as contactors, solenoid valves, etc., which require another transformer.

2.7 Programming key (copy set-up)

The keys must be connected to the connector (4 pin AMP) fitted on the controllers. All the operations can be performed with the controller off. The functions are selected using the 2 dipswitches, accessed by removing the battery cover:
- load the parameters for a controller onto the key (UPLOAD - Fig. 1);
- copy from the key to a controller (DOWNLOAD - Fig. 2);

UPLOAD



DOWNLOAD



⚠ The parameters can only be copied between controllers with the same code. The UPLOAD operation can, however, always be performed.

2.7.1 Copying and downloading the parameters

The following operations are used for the UPLOAD and/or DOWNLOAD functions, simply by changing the settings of the dipswitches on the key:
1. open the rear cover on the key and position the 2 dipswitches according to the desired operation;
2. close the rear cover on the key and plug the key into the connector on the controller;
3. press the button and check the LED: red for a few seconds, then green, indicates that the operation was completed correctly. Other signals or the flashing of the LED indicates that problems have occurred: refer to the table;
4. at the end of the operation, release the button, after a few seconds the LED goes OFF;
5. remove the key from the controller.

LED signal	Error	Meaning and solution
Red LED flashing	Batteries discharged at start copy	The batteries are discharged, the copy operation cannot be performed. Replace the batteries.
Green LED flashing	Batteries discharged during copy or at end of copy	During the copy operation or at the end of the operation the battery level is low. Replace the batteries and repeat the operation.
Red/green LED flashing (orange signal)	Instrument not compatible	The parameter set-up cannot be copied as the connected controller model is not compatible. This error only occurs for the DOWNLOAD function; check the code of the controller and run the copy only for compatible codes.
Red and green LED on	Error in data being copied	Error in the data being copied. The data saved on the key are partly/completely corrupted. Reprogram the key.
Red LED on steady	Data transfer error	The copy operation was not completed due to a serious error when transferring or copying the data. Repeat the operation, if the problem persists check the key connections.
LEDs off	Batteries disconnected	Check the batteries.

3. USER INTERFACE

The front panel contains the display and the keypad, made up of 4 buttons, that, when pressed alone or combined with other buttons, are used to program the controller.

IR33 Universal front panel

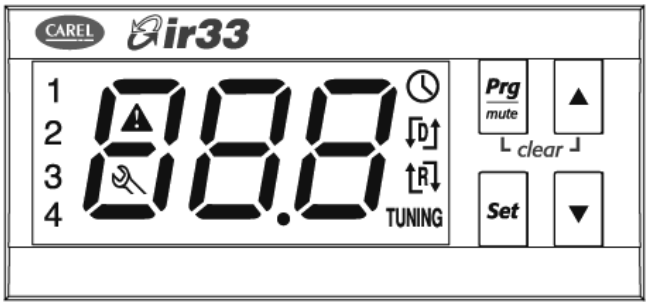

Fig. 3. a

3.1 Display

The display shows temperature in range -50 to +150°C.The temperature is displayed with resolution to the tenths between –19.9 and + 59.9 °C Alternatively, displays the value of one of the analogue or digital inputs (see parameter c52). In the event of alarms, the value of the probe is displayed alternating with the codes of the active alarms. During programming, it shows the codes and values of the parameters.

ICON	FUNCTION	NORMAL OPERATION			START UP	NOTES
		ON	OFF	BLINK		
1	Output 1	Output 1 active	Output 1 not active	Output 1 request		Flashes when activation is delayed or inhibited by protection times, external disabling or other procedures in progress.
2	Output 2	Output 2 active	Output 2 not active	Output 2 request		See note for output 1
3	Output 3	Output 3 active	Output 3 not active	Output 3 request		See note for output 1
4	Output 4	Output 4 active	Output 4 not active	Output 4 request		See note for output 1
⚠	ALARM		No alarm present	Alarms in progress		Flashes when alarms are active during normal operation or when an alarm is active from external digital input, immediate or delayed.
🕒	CLOCK			Clock alarm Operating cycle active	ON if Real Time Clock present	
R	REVERSE	Reverse operation active	Reverse operation not active	PWM /0 to 10 Vdc outputs		Signals operation of the unit in "reverse" mode, when at least one relay with "reverse" operation is active. Flashes if PWM/0 to 10 Vdc outputs.
🔧	SERVICE		No malfunction	Malfunction (e.g. E2PROM error or probes faulty). Contact service		
TUNING	TUNING		AUTO-Tuning function not enabled	AUTO-Tuning function enabled		On if the AUTO-Tuning function is active
D	DIRECT	Direct operation active	Direct operation not active	PWM /0 to 10 Vdc outputs		Signals operation of the unit in "direct" mode, when at least one relay with "direct" operation is active. Flashes if PWM/0 to 10 Vdc outputs.

Tab 3.a

The user can select the standard display by suitably setting parameter c52.

3.2 Keypad

Prg / *mute*	Pressing the button alone: • If pressed for more than 5 seconds, accesses the menu for setting the type P parameters (frequent); • Mutes the audible alarm (buzzer) and deactivates the alarm relay; • When editing the parameters, pressed for 5 s, permanently saves the new values of the parameters; • When setting the time and the on/off times returns to the complete list of parameters. • Pressing together with other buttons • If pressed for more than 5 seconds together with Set, accesses the menu for setting the type C parameters (configuration); • If pressed for more than 5 seconds together with UP, resets any alarms with manual reset (the message 'rES' indicates the alarms have been reset); any alarm delays are reactivated; Start up • If pressed for more than 5 seconds at start up, activates the procedure for loading the default parameter values.
▲	(UP) Pressing the button alone: • Increases the value of the set point or any other selected parameter Pressing together with other buttons • If pressed for more than 5 seconds together with Prg/mute, resets any alarms with manual reset (the message 'rES' indicates the alarms have been reset); any alarm delays are reactivated.
▼	(DOWN) Pressing the button alone: • Decreases the value of the set point or any other selected parameter. • In normal operation accesses the display of the second probe and the digital inputs (if enabled).
Set	Pressing the button alone: • If pressed for more than 1 second displays and/or sets the set point • Pressing together with other buttons • If pressed for more than 5 seconds together with Prg/mute, accesses the menu for setting the type C parameters (configuration).

Tab. 3.b

3.3 Programming

The operating parameters can be modified using the front keypad. Access differs depending on the type: set point, frequently-used parameters (P) and configuration parameters (C). Access to the configuration parameters is protected by a password that prevents unwanted modifications or access by unauthorised persons. The password can be used to access and set all the control parameters.

3.3.1 Setting set point 1 (St1)

To change set point 1 (default =20°C):

- press ***Set***: the display shows St1 and then the current value of St1;
- press ▲ or ▼ to reach the desired value;
- press Set to confirm the new value of St1;
- the display returns to the standard view.



Fig. 3.b

3.3.2 Setting set point 2 (St2)

In operating modes 6, 7, 8 and 9 (see the chapter on Functions) the controller works with two set points.
To change set point 2 (default =40 °C):

- press ***Set*** twice slowly: the display shows St2 and then the current value of St2;
- press ▲ or ▼ until reaching the required value
- press ***Set*** to confirm the new value of St2;
- the display returns to the standard view.



Fig. 3.c

3.3.3 Setting type P parameters

Type P parameters (frequents) are indicated by a code beginning with the letter P, followed by one or two numbers.

1. Press **Prg** (mute) for more than 5 seconds (if an alarm is active, the buzzer is muted), the display shows the code of the first modifiable type P parameter, P1;
2. Press ▲ or ▼ until reaching the parameter to be modified. When scrolling, an icon appears on the display representing the category the parameter belongs to (see the table below and the table of parameters);
3. Press **Set** to display the associated value;
4. Increase or decrease the value using ▲ or ▼ respectively, until reaching the desired value;
5. Press **Set** to **temporarily** save the new value and return to the display of the parameter code;
6. Repeat operations from 2) to 5) to set other parameters;
7. To **permanently** save the new values of the parameters, press **Prg** (mute) for 5 s, thus exiting the parameter setting procedure.

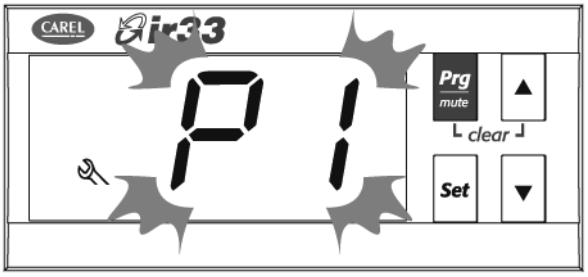

Fig. 3.d

⚠
- If no button is pressed for 10s, the display starts flashing, and after 1 minute automatically returns to the standard display.
- To increase the scrolling speed, press and hold the ▲ / ▼ button for at least 5 seconds.

3.3.4 Setting type C or d parameters

Type C or d parameters (configurations) are indicated by a code beginning with the letters C or d respectively, followed by one or two numbers.

1. Press **Prg** (mute) and **Set** together for more than 5 seconds: the display shows the number 0;
2. Press ▲ or ▼ until displaying the **password= 77**;
3. Confirm by pressing **Set**;
4. If the value entered is correct, the first modifiable parameter c0 will be shown, otherwise the standard display will resume;
5. Press ▲ or ▼ until reaching the parameter to be modified. When scrolling, an icon appears on the display representing the category the parameter belongs to (see the table below and the table of parameters);
6. Press **Set** to display the associated value;
7. Increase or decrease the value using ▲ or ▼ respectively, until reaching the desired value;
8. Press **Set** to **temporarily** save the new value and return to the display of the parameter code;
9. Repeat operations from 5) to 8) to set other parameters;
10. To **permanently** save the new values of the parameters, press **Prg** (mute) for 5 s, thus exiting the parameter setting procedure.

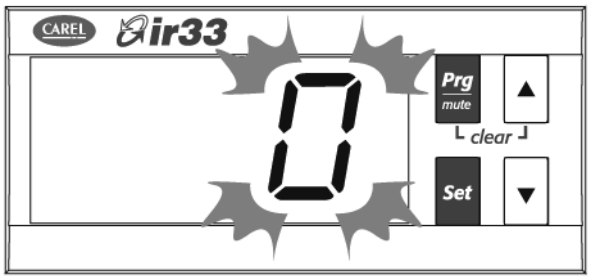

Fig. 3.e

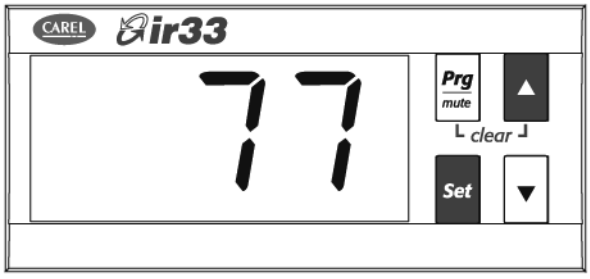

Fig. 3.f

⚠ This procedure can be used to access all the control parameters.

PARAMETER CATEGORIES

Category	Icon		Category	Icon
Programming			Output 2	2
Alarm			Output 3	3
PID	TUNING		Output 4	4
Output 1	1		RTC	

All the modifications made to the parameters, temporarily stored in the RAM, can be cancelled, returning to the standard display by not pressing any button for 60 seconds.
The values of the clock parameters, however, are saved when entered.

If the controller is powered down before pressing Prg/mute, all the modifications made to the parameters will be lost

In the two parameter setting procedures (P and C), the new values are only saved after having pressed Prg/mute for 5 seconds. When setting the set point, the new value is saved after confirming with **Set**.

3.4 Example: setting the current date/time and the on/off times

This example applies to models fitted with RTC.

3.4.1 Setting the current date/time

1. Access the type C parameters as described in the corresponding paragraph;
2. Press the ▲ / ▼ buttons and select the parent parameter, tc ;
3. Press **Set**: parameter y is displayed, followed by two digits that indicate the current year;
4. Press **Set** and set the value of the current year (e.g.: 8=2008), press **Set** again to confirm;
5. Press ▲ to select the next parameter -month -and repeat steps 3 & 4 for the following parameters:
   M=month, d=day of the month, u=day of the week
   h=hours,m=minutes;
6. To return to the list of main parameters, press Prg/mute and then access parameters ton and toF (see the following paragraph), or:
7. To save the settings press Prg/mute for 5 seconds and exit the parameter setting procedure.

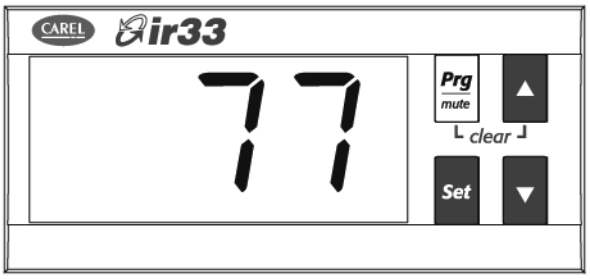

Fig. 3.g

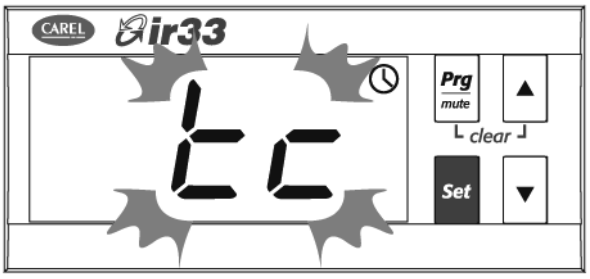

Fig. 3.h

3.4.2 Setting the on/off times

1. Access the type C parameters as described in the corresponding paragraph;
2. Press the ▲ / ▼ buttons and select the parent parameter, ton = on time;
3. Press **Set** parameter d is displayed, followed by one or two digits that represent the on day, as follows:
   0= timed start disabled
   1 to 7= Monday to Sunday
   8= Monday to Friday
   9= Monday to Saturday
   10= Saturday & Sunday
   11= every day
4. Press **Set** to confirm and go to the on time parameters h/m=hours/minutes;
5. To return to the list of main parameters, press Prg/mute and then access parameter toF = off time;
6. To save the settings press Prg/mute for 5 seconds and exit the parameter setting procedure.



Fig. 3.i

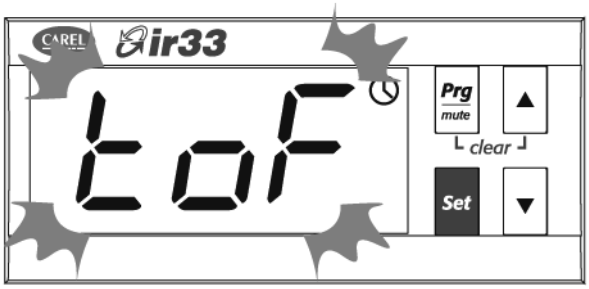

Fig. 3.j

3.4.3 Setting the default parameters

To set the parameters to the default values:
- Power down the controller;
- Press Prg/mute;
- Power up the controller holding the Prg/mute button, until the message "Std" is shown on the display.

⚠ This will cancel any changes made and restore the original values set by the manufacturer.

3.4.4 Alarms with manual reset

The alarms with manual reset can be reset by pressing Prg/mute and ▲ p together for more than 5 seconds.

3.4.5 Activating the operating cycle

The operating cycle activation mode is selected using parameter P70 (see the chapter on Control). Below is a description of the activation procedure from the keypad (manual), digital input and RTC (automatic).

3.4.6 Manual activation (P70=1)

During the normal operation of the controller, pressing the ▲ button for 5 seconds displays CL, which indicates "operating cycle". mode is being accessed The operating cycle features 5 temperature/time steps, which need to be set (see the chapter on Control). The operating cycle will be run and the clock icon will flash.

The operating cycle ends automatically when it reaches the fifth step. To stop an operating cycle before the end, press the ▲ button again for 5 seconds. The message "StP" (stop) will be displayed.
If P70≠1, pressing the ▲ button for 5s does not active a procedure, but rather the display shows "StP" and normal control resumes.

3.4.7 Activation from digital input 1/2 (P70=2)

To activate the operating cycle from digital input 1, set P70=2 and c29=5. For digital input 2 set P70=2 and c30=5. Connect the selected digital input to a button (NOT a switch). To activate the operating cycle, briefly press the button: this will be run, and the clock icon will flash. To stop an operating cycle before the end, press the ▲ button again for 5 seconds. The message "StP" (stop) will be displayed.

3.4.8 Automatic activation (P70=3)

The automatic activation of an operating cycle is only possible on the models fitted with RTC.
To activate an operating cycle automatically:
- Set the parameters for the duration of the step and the set point (P71-P80);
- Program the controller automatic on/off times – parameters ton and toF;
- Set parameter P70=3.

The operating cycle will start automatically when the controller switches on.

3.4.9 Auto-Tuning activation

See the chapter on Control.

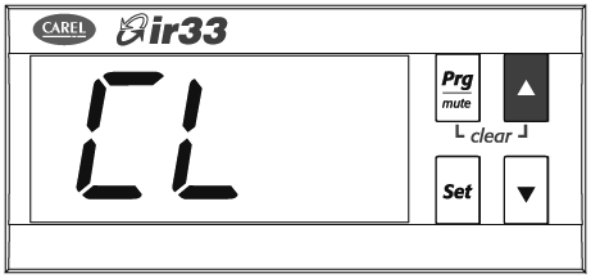

Fig. 3.k



Fig. 3.l

3.4.10 Displaying the inputs

- Press ▼ : the current input will be displayed, alternating with the value:
  - b1 : probe 1;
  - b2 : probe 2;
  - di1 : digital input 1;
  - di2 : digital input 2.
- Press ▲ and ▼ to select the input to be displayed;
- Press ***Set*** for 3 seconds to confirm.

⚠ If when scanning the inputs a digital input has not been configured, the display will show "nO" (indicating that the digital input does not exist or has not been configured), while "opn" and "clo" will be displayed to indicate, respectively, that the input is open or closed. For the probes, the value displayed will be the value currently measured by the probe or, if the probe is not fitted or not configured, the display will show "nO".

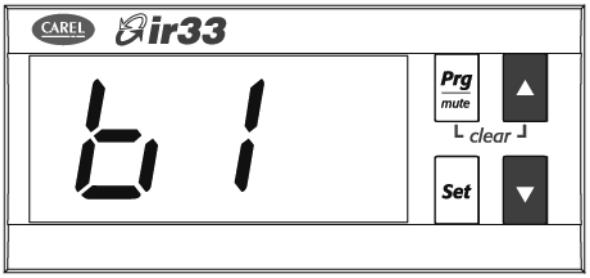

Fig. 3.m

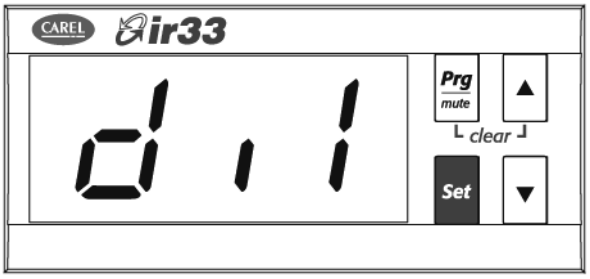

Fig. 3.n

3.4.11 Calibrating the probes

Parameters P14 and P15 are used to calibrate the first and second probe respectively. Access the 2 parameters and then set the required values. When pressing ***Set***, after having entered the value, the display does not show the parameter, but rather immediately shows the new value of the probe reading being calibrated. This means the result of the setting can be checked immediately and any adjustments made as a consequence. Press ***Set*** again to save the value.

3.5 Using the remote control (accessory)

The compact remote control with 20 buttons allows direct access to the following parameters:

- St1 (set point 1)
- St2 (set point 2)
- P1 (differential St1)
- P2 (differential St2)
- P3 (dead zone differential)

and the following functions can also be accessed:

- set the time
- display the value measured by the probes
- display the alarm queue and reset any alarms with manual reset, once the cause has been resolved.
- set the on time band (see the corresponding paragraph).

The remote control features the four buttons, ***Prg*** / ***mute***, ***Set***, ▲ and ▼, which access almost all the functions provided by the instrument keypad. The buttons can be divided into three groups, based on their functions:

- Enabling/disabling the use of the remote control (Fig. 1);
- Remote simulation of the controller keypad (Fig. 2);
- Direct display/editing of the most common parameters (Fig. 3).

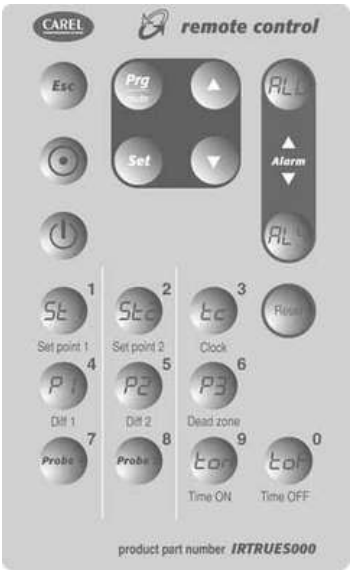

Fig. 3.o

3.5.1 Remote control enable code (parameter c51)

Parameter c51 attributes a code for accessing the controller. This means that the remote control can be used when there are a series of controllers on the same panel, without the risk of interference.

Par.	Description	Def	Min	Max	UM
c51	Code for enabling the remote control 0=Programming by remote control without code	1	0	255	-

3.5.2 Activating and deactivating the use of the remote control

Button	Immediate function	Delayed function
	used to enable the remote control; each instrument displays its own enabling code	
Esc	ends operation using the remote control, cancelling all changes made to the parameters	
Prg mute	used to display the configuration parameters	pressing and holding for 5s ends the operation of the remote control, saving the modified parameters
NUMS.	used to select the instrument, by entering the enabling code displayed.	

The buttons used are shown in the figure. By pressing the button, each instrument displays its own remote control enabling code (parameter c51). The numeric keypad is used to enter the enabling code of the instrument in question. At the end of this operation, only the instrument with the selected enabling code will be programmed from the remote control, all the others will resume normal operation. Assigning different enabling codes to the instruments, allows, in this phase, only the desired instrument to be programmed using the remote control, without the risk of interference. The instrument enabled for programming from the remote control will display the reading and the message rCt. This status is called Level 0. When having entered programming mode, pressing **Prg** mute for 5 seconds exits the programming of the remote control, saving the modifications; vice-versa, press Esc to exit the programming of the remote control, without saving the modifications.

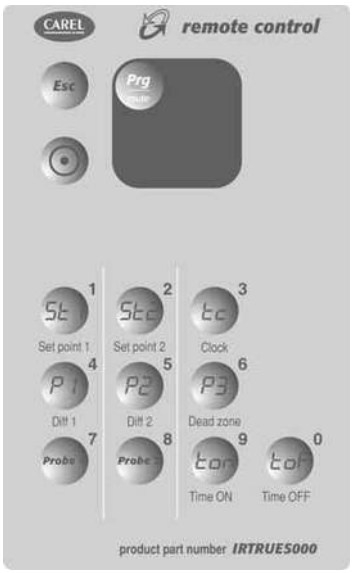

Fig. 3.p

3.5.3 Remote simulation of the controller keypad

The buttons used are shown in the figure. In Level 0 (display the reading and message rCt), the following functions are active:

Button	Immediate function
Prg mute	Mute the buzzer, if ON

In this level, the **Set** and **Prg** mute buttons are also active, used to activate the set point (Level 1) and the configuration parameters (Level 2).



Fig. 3.q

Button	Immediate function	Delayed function
Prg mute	Edit the configuration parameters	Pressing and holding for 5s saves the modified parameters and ends the operation of the remote control
Set	Set the set point	

In Levels 1 and Level 2, the **Prg** mute, **Set**, ▲ and ▼ buttons repeat the corresponding functions on the controller keypad. In this way, all the controller parameters can be displayed and set, even those without shortcut buttons.

3.5.4 Direct display/editing of the most common parameters

Some parameters are directly accessible using specific buttons:
- St1 (set point 1);
- St2 (set point 2);
- P1 (differential St1);
- P2 (differential St2);
- P3 (dead zone differential)

and the following functions can also be accessed:
- set the current time(tc);
- display the value measured by the probes (Probe1, Probe2);
- display the alarm queue (AL0-AL4);
- reset any alarms with manual reset, once the cause has been resolved;
- set the on time band (ton, toF), see the corresponding paragraph.

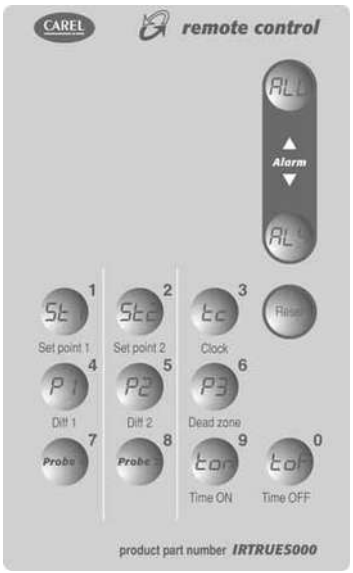

Fig. 3.r

4. COMMISSIONING

4.1 Configuration

The configuration parameters should be set when commissioning the controller, and involve:
- serial address for the network connection;
- enabling the keypad, buzzer and the remote control (accessory);
- setting a delay for starting control after the device is powered up (delay at start-up);
- gradual increase or reduction in the set point (soft start).

4.1.1 Serial address (parameter c32)

c32 assigns the controller an address for the serial connection to a supervisory and/or telemaintenance system.

Par.	Description	Def	Min	Max	UoM
c32	Serial connection address	1	0	207	-

4.1.2 Disable keypad/remote control (parameter c50)

Some functions relating to the use of the keypad can be disabled, for example, the setting of the parameters and the set point if the controller is exposed to the public.

Par.	Description	Def	Min	Max	UoM
c50	Disable keypad and remote control	1	0	2	-

Below is a summary of the modes that can be disabled:

Par c50	Edit P parameters	Change set point	Settings from remote control
0	NO	NO	YES
1	YES	YES	YES
2	NO	NO	NO

With the "change set point" and "edit P parameters" functions disabled, the set point and the type P parameters cannot be changed, however the values can be displayed. The type C parameters, on the other hand, being protected by password, can be set on from keypad, following the standard procedure. With the remote control disabled, the values of the parameters can be displayed but not set. See the paragraph on using the remote control.

⚠ If c50 is set =2 from the remote control, this is instantly disabled. To re-enable the remote control, set c50=0 or c50=1 on the keypad.

4.1.3 Show standard display/disable buzzer (parameters c52,c53)

Par.	Description	Def	Min	Max	UoM
c52	Display display 0=Probe 1 1=Probe 2 2=Digital input 1 3=Digital input 2	0	0	3	-
c53	Buzzer 0=Enabled 1=Disabled	0	0	1	-

4.1.4 Delay at start-up (parameter c56)

Used to delay the start of control when the device is powered up. This is useful in the event of power failures, so that the controllers (in the network) don't all start at the same time, avoiding potential problems of electrical overload.

Par.	Description	Def	Min	Max	UoM
c56	Delay at start-up	0	0	255	s

4.1.5 Soft start (parameter c57)

This function is used to gradually increase or decrease the set point according to the value of the parameter. The function is useful if the controller is used in cold rooms or seasoning rooms, or in similar situations when starting at full load may not be compatible with the required process. Soft start, if active, is used on power-up or within an operating cycle. The unit of measure is expressed in minutes / °C.

Par.	Description	Def	Min	Max	UoM
c57	Soft start	0	0	99	min/°C

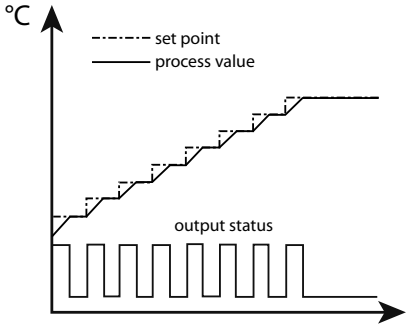

Example: when c57=5, assuming the set point is 30°C and the differential 2 °C, and that the ambient temperature is 20°C; on power-up the virtual set point will be the same as the temperature measured, and will remain at this value for 5 minutes. After 5 minutes, the virtual set point will be 21 degrees, no outputs will be activated, while after another 5 minutes the virtual set point will be 22°C, thus entering the control band (as the differential is 2°C) and heating will start. Once the temperature reaches the virtual set point, the function stops and the process continues.

4.2 Preparing for operation

Once having completed the installation, configuration and programming operations, before starting the controller check that:
- The wiring is performed correctly;
- The programming logic is suitable for controlling the unit and the system being managed;
- If the controller is fitted with RTC (clock), set the current time and the on and off times;
- Set the standard display;
- Set the "type of probe" parameter based on the probe available (NTC, NTC-HT, PTC, PT1000) and the unit of measure (°C or °F);
- Set the type of control: ON/OFF (proportional) or proportional, integral, derivative (PID);
- Set the unit of measure for the probes (°C or °F);
- Any operating cycles are programmed correctly;
- The protection functions (delay at start-up, rotation, minimum on and off times for the outputs) are active;
- The remote control enabling code is set, if a series of controllers are installed in the same system;
- If the CONV0/10A0 module is connected, the cycle time is set to the minimum (c12=0.2 s);
- The special mode is set in the correct sequence, i.e. first parameter c0 is set, and then parameter c33 (see the chapter on Functions).

⚠ All the alarms with manual reset can be reset by pressing the Prg/mute and ▲ buttons together for more than 5 seconds.

4.3 Switching the controller On/Off

The unit can be switched ON/OFF from a number of sources; supervisor and digital input (parameters c29,c30). The digital input can be used to switch the controller on/off in level 1 (maximum priority).

⚠ If more than one digital input is selected as On/Off, the ON status will be activated when all the digital inputs are closed. If just one contact is open, the unit is switched OFF. In this operating mode, the display shows the standard view, alternating with the message "OFF". In OFF status, the outputs are disabled, while the following functions are enabled:
- editing and display of the frequent and configuration parameters, and the set point;
- selection of the probe to be displayed;
- remote on/off;
- probe 1 error (E01), probe 2 error (E02), clock alarm (E06), EEPROM alarm - unit parameters (E07) and EEPROM alarm -operating parameters (E08).
- The controller switches from ON to OFF as follows: the compressor protection times are observed;
- The controller switches from OFF to ON as follows: the compressor protection times are observed.

5. FUNCTIONS

5.1 Probes (analogue inputs)

The probe parameters are used to :
- set the type of probe
- set the offset to correct the probe reading (calibration)
- activate a filter to stabilise the reading
- set the unit of measure shown on the display
- enable the second probe and the compensation function

Par.	Description	Def	Min	Max	UoM
c13	Type of probe 0=NTC standard range (-50T+90°C) 1=NTC enhanced range(-40T+150°C) 2=PTC standard range(-50T+150°C) 3=PT100 standard range(-50T+150°C)	0	0	3	-
P14	Calibration of probe 1	0	-20	20	°C/°F
P15	Calibration of probe 2	0	-20	20	°C/°F
c17	Probe disturbance filter	4	1	15	-
c18	Select temperature unit of measure 0=°C 1=°F	0	0	1	-

Parameter c13 defines the type of probe 1 (B1) and any probe 2 (B2). Parameters P14 and P15, for probe 1 and probe 2 respectively, are used to correct the temperature measured by the probes indicated on the display, using an offset: the value assigned to these parameters is in fact added to (positive value) or subtracted from (negative value) the temperature measured by the probes. When pressing ***Set***, after having entered the value, the display does not show the parameter, but rather immediately shows the new value of the probe reading being calibrated. This means the result of the setting can be checked immediately and any adjustments made as a consequence. Press ***Set*** again to access the parameter code and save the value. Parameter c17 defines the coefficient used to stabilise the temperature reading. Low values assigned to this parameter allow a prompt response of the sensor to temperature variations, but the reading becomes more sensitive to disturbance. High values slow down the response, but guarantee greater immunity to disturbance, that is, a more stable and more precise reading.

5.1.1 Second probe (parameter c19)

Par.	Description	Def	Min	Max	UoM
c19	Operation of probe 2 0=not enabled 1=differential operation 2=compensation in cooling 3=compensation in heating 4=compensation always active 5=enable logic on absolute set point 6=enable logic on diff. set point Validity : c0=1 or 2	0	0	6	-

The second probe must be the same type as the first, NTC, NTC-HT, PTC or PT1000, as set by parameter c13.

For the explanation of the types of control based on parameter c19, see the chapter on "Control".

5.2 Standard operating modes (parameters St1,St2,c0,P1,P2,P3)

The controller can operate in 9 different modes, selected by parameter c0. The basic modes are "direct" and "reverse". In "direct" mode, the output is activated if the value measured is greater than the set point plus a differential. In "reverse" mode the output is activated if the temperature is less than the set point plus a differential. The other modes are a combination of these, with possibility of 2 set points (St1 & St2) and 2 differentials (P1 & P2) based on the mode, "direct" or "reverse", or the status of digital input 1. Other modes include "dead zone" (P3), "PWM" and "alarm". The number of outputs activated depends on the model (V/W/Z=1,2,4 relay outputs, D/A =1/4 PWM outputs, B/E=1/2 analogue outputs and 1/2 relay outputs). Selecting the correct operating mode is the first action to be performed when the default configuration, i.e. "reverse" operation, is not suitable for the application in question.

Par.	Description	Def	Min	Max	UoM
St1	Set point 1	20	c21	c22	°C/°F
St2	Set point 2	40	c23	c24	°C/°F
c0	1=direct 2=reverse 3=dead zone 4=PWM 5=alarm 6=direct/reverse from digital input 1 7=direct: set point & differential from digital input 1 8=reverse: set point & differential from digital input 1 9=direct & reverse with separate set p.	2	1	9	-
P1	Set point differential 1	2	0.1	50	°C/°F
P2	Set point differential 2	2	0.1	50	°C/°F
P3	Dead zone differential	2	0	20	°C/°F
c21	Minimum value of set point 1	-50	-50	c22	°C/°F
c22	Maximum value of set point 1	60	c21	150	°C/°F
c23	Minimum value of set point 2	-50	-50	c24	°C/°F
c24	Maximum value of set point 2	60	c23	150	°C/°F

To be able to set c0, the value of c33 must be 0. If c33=1, changing c0 has no effect.

For the mode set to become immediately operational, the controller needs to be switched off an on again. Otherwise correct operation is not guaranteed.

The meaning of parameters P1 & P2 changes according to the operating mode selected. Fore example, in modes 1 & 2 the differential is always P1. P2, on the other hand, is the "reverse" differential in mode 6 and the "direct" differential in mode 9.

5.2.1 Direct (parameter c0=1)

In "direct" operation the controller ensures the value being controlled (in this case the temperature) does not exceed the set point (St1). If it does, the outputs are activated in sequence. The activation of the outputs is distributed equally across the differential (P1). When the value measured is greater than or equal to St1+P1 (in proportional only operation), all the outputs are activated. Similarly, if the value measured starts falling, the outputs are deactivated in sequence. When reaching St1, all the outputs are deactivated.

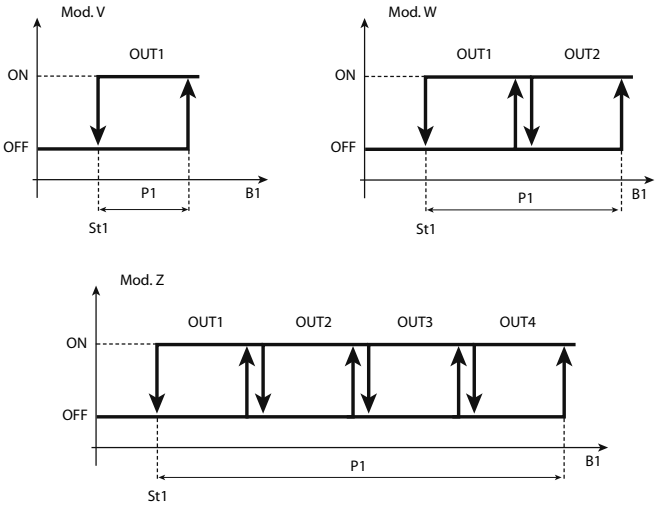

Key

St1	Set point 1
P1	Set point differential 1
OUT1/2/3/4	Output 1/2/3/4
B1	Probe 1

5.2.2 Reverse (parameter c0=2)

"Reverse" operation is similar to "direct" operation, however the outputs are activated when the value being controlled decreases, starting from the set point (St1). When the value measured is less than or equal to St1-P1 (in proportional only operation), all the outputs are activated. Similarly, if the value measured starts rising, the outputs are deactivated in sequence. When reaching St1, all the outputs are deactivated.

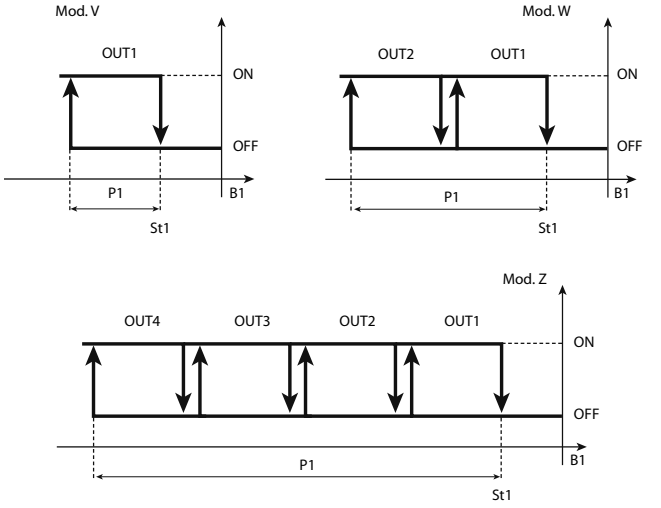

Key

St1	Set point 1
P1	Set point differential 1
OUT1/2/3/4	Output 1/2/3/4
B1	Probe 1

This is the default setting.

5.2.3 Dead zone (parameter c0=3)

The aim of this control mode is to bring the measured value within an interval around the set point (St1), called the dead zone. The extent of the dead zone depends on the value of parameter P3. Inside the dead zone, the controller does not activate any outputs, while outside it works in "direct" mode when the temperature is increasing and in "reverse" mode when it is decreasing. According to the model used, there may be one or more outputs in "direct" and "reverse" modes. These are activated or deactivated one at a time, as already described for modes 1 & 2, according to the value measured and the settings of St1, P1 and P2.

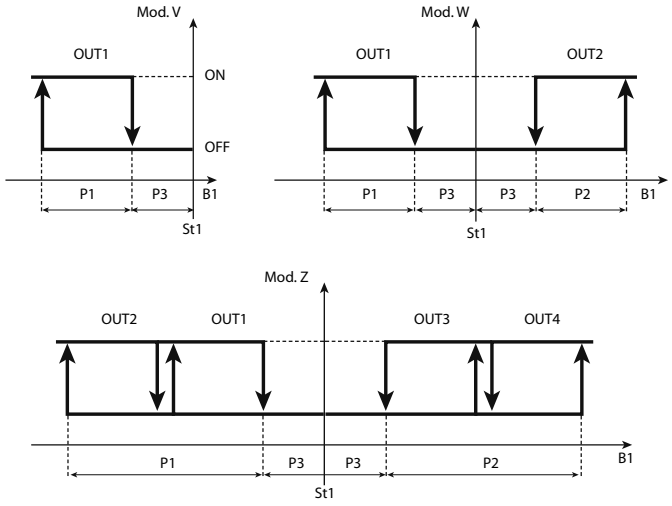

Key

St1	Set point 1
P1/P2	"Reverse"/"direct" differential
P3	Dead zone differential
OUT1/2/3/4	Output 1/2/3/4
B1	Probe 1

When the controller only has 1 output, it works in "reverse" mode with dead zone.

5.2.4 PWM (parameter c0=4)

The control logic in PWM mode uses the dead zone, with the outputs activated based on pulse width modulation (PWM). The output is activated in a period equal to the value of parameter c12 for a variable time, calculated as a percentage; the ON time is proportional to the value measured by B1 inside the differential. For small deviations, the output will be activated for a short time. When exceeding the differential, the output will be always on (100% ON). PWM operation thus allows "proportional" control of actuators with typically ON/OFF operation (e.g. electric heaters), so as to improve temperature control. PWM operation can also be used to gave a modulating 0 to 10 Vdc or 4 to 20 mA control signal on IR33 (DN33) Universal models A, D with outputs for controlling solid state relays (SSR). In this case, the accessory code CONV0/10A0 needs to be connected to convert the signal. In PWM operation, the "direct"/"reverse" icon flashes.

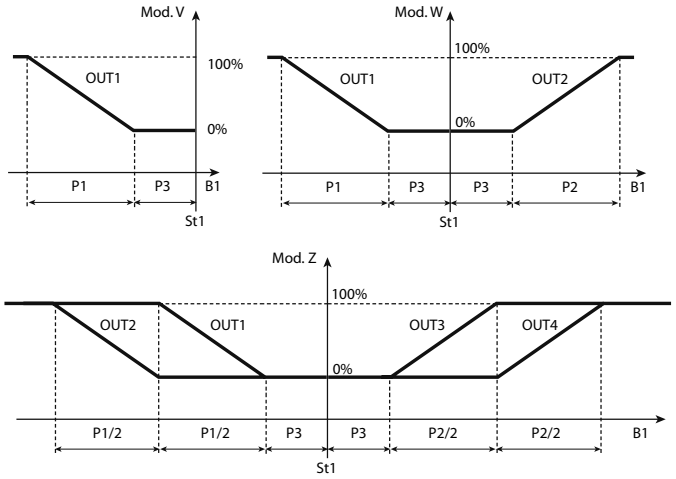

Key

St1	Set point 1
P1/P2	"Reverse"/"direct" differential
P3	Dead zone differential
OUT1/2/3/4	Output 1/2/3/4
B1	Probe 1

When the controller only has 1 output, it works in "reverse" mode with dead zone.

PWM mode should not be used with compressors or other actuators whose reliability may be affected by starting/stopping too frequently. For relay outputs, parameter c12 should not be set too low, so as to not compromise the life of the component..

5.2.5 Alarm (parameter c0=5)

In mode 5, one or more outputs are activated to signal a probe disconnected or short-circuited alarm or a high or low temperature alarm. Models V and W only have one alarm relay, while model Z has two: relay 3 is activated for general alarms and for the low temperature alarm, relays 4 is activated for general alarms and for the high temperature alarm. The activation of the alarm relay is cumulative to the other signals in the other operating modes, that is, alarm code on the display and audible signal. For models W & Z, the relays not used to signal the alarms are used for control, as for mode 3 and shown the following diagrams. This operation mode is not suitable for the models B and E.

Par.	Description	Def	Min	Max	UoM
P25	Low temperature alarm threshold P29=0, P25=0: threshold disabled; P29=1, P25= -50: thresh. disabled	-50	-50	P26	°C/°F
P26	High temperature alarm threshold P29=0, P26=0: threshold disabled; P29=1, P26= 150: thresh. disabled	150	P25	150	°C/°F
P27	Alarm differential	2	0	50	°C/°F
P28	Alarm delay time	120	0	250	min
P29	Type of alarm threshold 0=relative; 1=absolute.	1	0	1	-

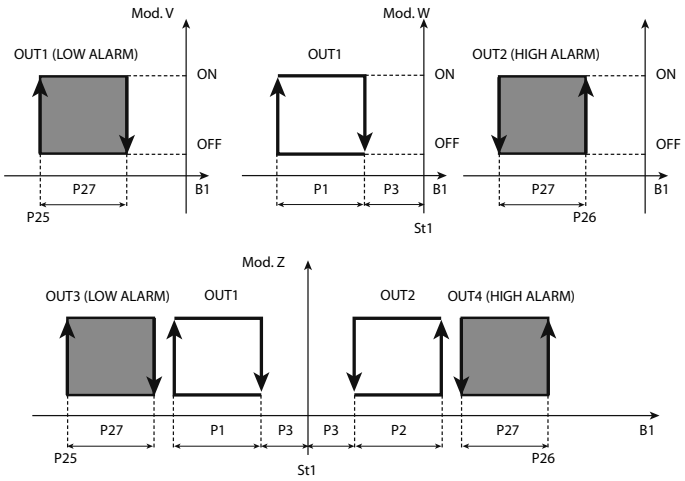

Key	
St1	Set point 1
P1	"Reverse" differential
P2	"Direct" differential
P3	Dead zone differential
P27	Alarm differential
OUT1/2/3/4	Output 1/2/3/4
B1	Probe 1

Parameter P28 represents the "alarm activation delay" in minutes; the low temperature alarm (E05) is activated only if the temperature remains below the value of P25 for a time greater than P28. The alarm may relative or absolute, depending on the value of parameter P29. In the former case (P29=0), the value of P25 indicates the deviation from the set point and thus the activation point for the low temperature alarm is: set point - P25. If the set point changes, the activation point also changes automatically. In the latter case (P29=1), the value of P25 indicates the low temperature alarm threshold. The low temperature alarm active is signalled by the buzzer and code E05 on the display. The same applies to the high temperature alarm (E04), with P26 instead of P25.

Alarm set point relative to working set point P29=0			
Low temperature alarm		High temperature alarm	
Enable	Disable	Enable	Disable
Setpoint-P25	Setpoint-P25+P27	Setpoint+P26	Setpoint +P26-P27

Absolute alarm set point P29=1			
Low temperature alarm		High temperature alarm	
Enable	Disable	Enable	Disable
P25	P25+P27	P26	P26-P27

The low and high temperature alarms are automatically reset; if there is an alarm active on the control probe, these alarms are deactivated and monitoring is reinitialised.

When alarms E04 and E05 are active, the buzzer can be muted by pressing Prg/mute. The display remains active.

5.2.6 Direct/reverse with changeover from digital input 1 (parameter c0=6)

The controller operates in "direct" mode based on St1 when digital input 1 is open, in "reverse" based on St2 when it is closed.

INPUT DI1 OPEN INPUT DI1 CLOSED

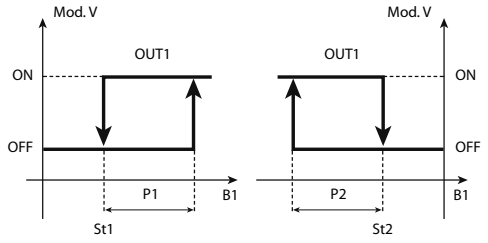

Key	
St1/St2	Set point 1/2
P1	"Direct" differential
P2	"Reverse" differential
OUT1	Output 1
B1	Probe 1

For models W & Z the activations of the outputs are equally distributed inside the differential set (P1/P2).

Parameter c29 is not active in mode 6.

5.2.7 Direct with set point & differential, changeover from digital input 1 (parameter c0=7)

The controller always operates in "reverse" mode, based on St1 when digital input 1 is open and based on St2 when it is closed.

INPUT DI1 OPEN INPUT DI1 CLOSED

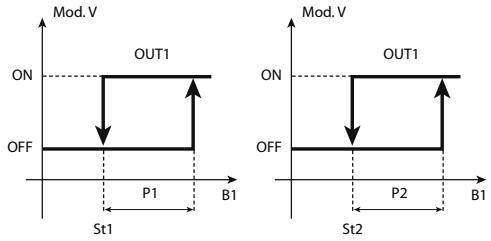

Key	
St1/St2	Set point 1/2
P1	"Direct" differential St1
P2	"Direct" differential St2
OUT1	Output 1
B1	Probe 1

For models W & Z the activations of the outputs are equally distributed across the differential (P1/P2).

Parameter c29 is not active in mode 7.

5.2.8 Reverse with set point & differential, changeover from digital input 1 (parameter c0=8)

The controller always operates in "reverse" mode, based on St1 when digital input 1 is open and based on St2 when it is closed.

INPUT DI1 OPEN INPUT DI1 CLOSED

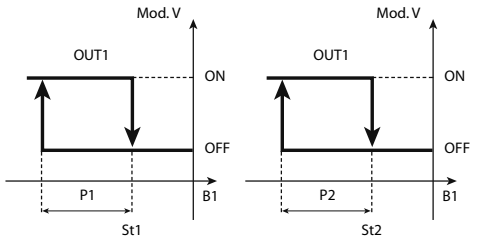

Key	
St1/St2	Set point 1/2
OUT1	Output 1
P1	"Reverse" differential
B1	Probe 1
P2	"Reverse" differential

For models W & Z the activations of the outputs are equally distributed across the differential (P1/P2).

Parameter c29 is not active in mode 8.

5.2.9 Direct/reverse with two set points (par. c0=9)

In this mode, available only on the models with 2 or 4 outputs, half of the outputs are active in "direct" mode and half in "reverse". The unique aspect is that there are no restrictions in the setting of the set point for the two actions, therefore it is like having two independent controllers that work with the same probe.

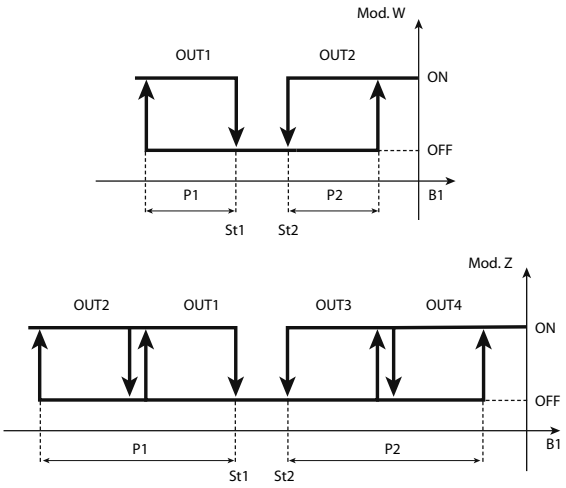

Key	
St1/St2	Set point 1/2
P1	"Reverse" differential St1
P2	"Direct" differential St2
OUT1/2/3/4	Output 1/2/3/4
B1	Probe 1

5.3 Validity of control parameters (parameters St1,St2,P1,P2,P3)

The parameters that define the operating mode have the validity defined in the table below:

Parameter	Validity	Note
St1	All modes	
St2	c0 = 6,7,8,9 or any value of c0 if c33 = 1(special operation). If c19=2, 3 or 4, St2 is used in compensation	In special operation (c33=1), St2 is shown in all modes but is only active for outputs with dependence equal to 2.
P1	All modes	
P2	c0=3,4,5,6,7,8,9 Active also in other modes if c33=1 (special operation) or c19=4.	note that in modes 3, 4 and 5, P2 is the differential of the "direct" action and refers to St1.
P3	c0=3,4 & 5 When c0=5 models W & Z only	

5.4 Selecting the special operating mode

Par.	Description	Def	Min	Max	UoM
c33	Special operation 0= Disabled 1= Enabled	0	0	1	-

Parameter c33 offers the possibility to create custom operating logic, called special operation. The logic created may be a simple adjustment or a complete overhaul of one of the nine modes. In any case, note that:

- Modes 1, 2, 9: do not consider the dead zone P3 nor the changeover in logic from digital input
- Modes 3, 4, 5: enable the dead zone differential P3. No changeover in logic from digital input.
- Mode 6: does not consider the differential P3. The changeover of digital input 1 means the outputs consider set point 2 rather than set point 1. The direct/reverse logic will be inverted. For outputs with "dependence"=2, only the changeover in logic is active, that is, the closing of the digital contact maintains "dependence"=2 (St2) but inverts the logic, exchanging the signs for "activation" and "differential/logic" (see the explanation below).
- Modes 7, 8: do not consider the dead zone P3. For outputs with "dependence"=1, the digital input only shifts the reference from St1/P1 to St2/P2, maintaining the control logic ("activation" "differential/logic" do not change sign). The digital input does not have any influence on the other control outputs, that is, with "dependence"=2 and alarms.

For the explanation of the "dependence", "activation" and "differential/logic" parameters, see the following paragraphs.

Before selecting c33=1: for starting modes other than c0=2 (default), this must be set before enabling special operation (c33=1): the change to c0 must be saved by pressing Prg/mute.

When c33=1, changing c0 no longer affects the special parameters. That is, c0 can be set however the special parameters (from c34 to d49) and the typical functions remain frozen in the previous mode with c33=1: while the parameters can be set individually, the typical functions cannot be activated. In conclusion, only after having set and saved the starting mode can the parameters be edited again and c33 set to 1.

If the mode needs to be changed after c33 has been set to 1, first return c33=0, press Prg/mute to confirm, set the required mode and save the change (Prg/mute), then return to special operation with c33=1. Setting c33 from 1 to 0, the controller cancels all changes to the "special parameters", which return to the values dictated by c0..

5.5 Special operating modes

When c33=1, 32 other parameters become available, the so-called special parameters. The special parameters are used to completely define the operation of each individual output available on the controller. In normal operation, that is, choosing the operating mode using parameter "c0", these parameters are automatically set by the controller. When c33=1, the user can adjust these settings using the 8 parameters that define each individual output:

- dependence
- type of output
- activation
- differential/logic
- activation restriction
- deactivation restriction
- maximum/minimum modulating output value (PWM or 0-10Vdc)

Special parameters and correspondence with the various outputs

	OUT1	OUT2	OUT3	OUT4
Dependence	c34	c38	c42	c46
Type of output	c35	c39	c43	c47
Activation	c36	c40	c44	c48
Differential/logic	c37	c41	c45	c49
Activation restriction	d34	d38	d42	d46
Deactivation restriction	d35	d39	d43	d47
Minimum modulating output value	d36	d40	d44	d48
Maximum modulating output value	d37	d41	d45	d49

For the default and minimum and maximum values of the special parameters, see the table of parameters.

Before setting parameter c33, make sure the required starting mode – param.c0 - has been set.

When c33=1, the special parameters are not visible and cannot be set to achieve the required operation. Only the set point and the differential will be modifiable.

5.5.1 Dependence (parameters c34,c38,c42,c46)

This the parameter that determines the specific function of each output. It links an output to a set point (control output) or a specific alarm (alarm output). Parameters c34,c38,c42,c46 correspond respectively to outputs 1,2,3,4, and the selection field ranges from 0 to 17.

Dependence = 0: the output is not enabled. This is the value set on versions V and W for the outputs that are not available (that is 2, 3 & 4 for version V, 3 & 4 for version W).

Dependence = 1 & 2: the output is the control output and refers to St1/P1 and St2/P2 respectively. In the subsequent special parameters, "type of output", "activation" and "differential/logic", the operation of the output can be defined completely.

Dependence = 3 to 14: the output is associated with one or more alarms. See the chapter on "Alarms" for the complete list.

Dependence = 15: "timer" operation. The output becomes independent of the measurement, set points, differentials, etc. and continues to switch periodically at a period=c12 (cycle time). The ON time (T_ON) is defined by the "activation" parameter as a percentage of the set cycle time. If an alarm occurs or the controller is switched OFF, "timer" operation is deactivated. For further information, see the description of the parameters "type of output", "activation".

Dependence = 16: the output is the control output: the association St1/P1 and St2/P2 depends on the status of digital input 1. If the input is open, reference will be to St1/P1; if the input is closed, reference will be to St2/P2. Changing the set point also reverses the operating logic.**Dependence = 17:** the output is the control output: the association St1/P1 and St2/P2 depends on the status of digital input 1. If the input is open, reference will be to St1/P1; if the input is closed, reference will be to St2/P2. Changing the set point maintains the operating logic.

DEPENDENCE VALUE	OUTPUT	ALARM RELAY STATUS IN NORMAL CONDITIONS
0	not active	-
1	relative to St1	-
2	relative to St2	-
3	active with alarm from digital input	OFF
4	active with alarm from digital input	ON
5	active with serious and "High" alarms E04)	OFF
6	active with serious and "High" alarms (E04)	ON
7	active with serious and "Low" alarms (E05)	OFF
8	active with serious and "Low" alarms (E05)	ON
9	active with "Low" alarm (E05)	OFF
10	active with "Low" alarm (E05)	ON
11	active with "High" alarm (E04)	OFF
12	active with "High" alarm (E04)	ON
13	active with serious alarm	OFF
14	active with serious alarm	ON
15	TIMER operation	-
16	operation of the output dependent on the status of digital input 1 with reversal of the operating logic	-
17	operation of the output dependent on the status of digital input 1 with operating logic maintained	-

Alarm relay OFF =output normally deactivated; energised with alarm.
Alarm relay ON = output normally activated; de-energised with alarm.

When ON the relay is normally active: it is deactivated with an alarm.
This is an intrinsic safety feature, as the contact switches, and thus the alarm is signalled, even if there is a power failure,
serious faults on the controller or a data memory alarm (E07/E08.)

In the models B and E, for the outputs 2 and 4, the dependence may be only 0, 1, 2.

5.5.2 Type of output (parameters c35,c39,c43,c47)

The parameter is active only if the output is the control output ("dependence"=1,2,16,17) or TIMER ("dependence"=15).
Type of output=0: the output is on/off.
Type of output=1: the output is PWM or "timer".

"Timer" operation is combined with "dependence"=15.
In the models B and E, the output type will always be 0 to 10 Vdc independently from the value of this parameter.

5.5.3 Activation (parameters c36,c40,c44,c48)

The parameter is active only if the output is the control output ("dependence"=1,2,16,17) or TIMER ("dependence"=15).
If "dependence"=1, 2, 16 and 17 it represents, for ON/OFF operation, the activation point of the output while, for PWM operation, it indicates the point where the output has the maximum value. The "activation" parameter is expressed as a percentage, from -100 to +100 and refers to the operating differential and the set point that the output refers to. If the output refers to St1 ("dependence"=1), "activation" is relative to the percentage value of P1; if the output refers to St2 ("dependence"= 2),"activation" is relative to the percentage value of P2.
If the value of "activation" is positive, the activation point is to the 'right' of the set point, while if negative it is to the 'left'.
If "dependence"=15 & "type of output"=1, the "activation" parameter defines the ON time as a percentage of the period (c12); in this case, "activation" must only have positive values (1 to 99)..

Example 1:
The figure below shows the activation points on a controller with 2 outputs, with the following parameters:
St1=10, St2=20, P1=P2=6
OUT1 (point A): "dependence"=c34=1, "activation"= c36=-100;
OUT2 (point B): "dependence"=c38=2, "activation"= c40= +75.
A=4; B=24.5

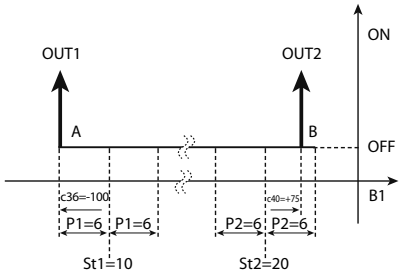

Key	
St1/2	Set point 1/2
P1	Differential for output 1
P2	Differential for output 2
OUT1/2	Output 1/2
B1	Probe 1

Example 2
A "timer" output is selected with "dependence"=15, "type of output"=1 and "activation" (ON percentage) between 1 and 99, with a cycle time set by c12. Below OUT1 and OUT2 are proposed as "timer" outputs with c36 greater than c40, example:
OUT1: c34=15, c35=1, c36=50; OUT2: c38=15, c39=1, c40=25.

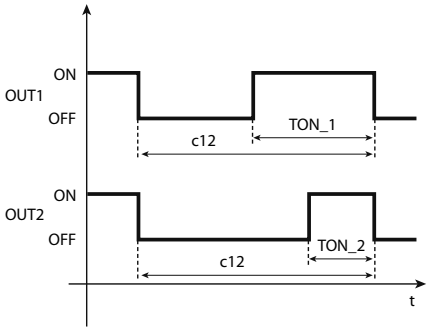

Key	
t	time
c12	cycle time
OUT1/2	Output 1/2
TON_1	(c36*c12)/100
TON_2	(c40*c12)/100

5.5.4 Differential/logic (parameters c37,c41,c45,c49)

The "differential/logic" parameter is only active if the output is the control output ("dependence"=1,2,16,17). Like the "activation" parameter, it is expressed as a percentage and is used to define the hysteresis of the

output, that is, for ON/OFF operation, the deactivation point of the output or, for PWM operation, the point where the output has the minimum value (ON time =0). If the output refers to St1 ("dependence"=1), "differential/logic" is relative to the percentage value of P1; if the output refers to St2 ("dependence"= 2), "differential/logic" is relative to the percentage value of P2.
If the value of "differential/logic" is positive, the deactivation point is greater than the activation point and "reverse" logic is created.
If the value of "differential/logic" is negative, the deactivation point is less than the activation point and "direct" logic is created.
Together with the previous "activation" parameter, this identifies the proportional control band.

Example 3.
Example 3 completes example 1, adding the deactivation points.
For the first output "reverse" operation is required, and the differential P1; for the second, "direct" logic and the differential equal to half of P2.
The parameters are :
Output 1 : "differential/logic"=c37=+100 (A')
Output 2: "differential/logic"=c41=-50 (B')
A'=10; B'=21.5

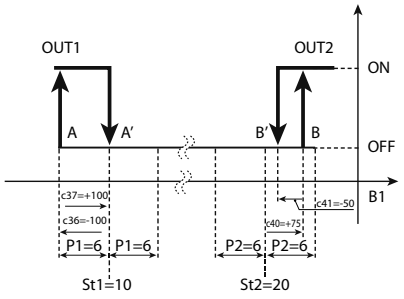

Key	
St1/2	Set point 1/2
c36/c40	Activation of output 1/2
c37/c41	Differential/logic for output 1/2
OUT1/2	Output 1/2
P1	Set point differential 1
P2	Set point differential 2
B1	Probe 1

As an example, reversing the values of "differential/logic", the new deactivation points are as follows
Output 1 : "differential/logic"=c37=-50(A')
Output 2: "differential/logic"=c41=+100 (B')
A"=1; B"=30.5

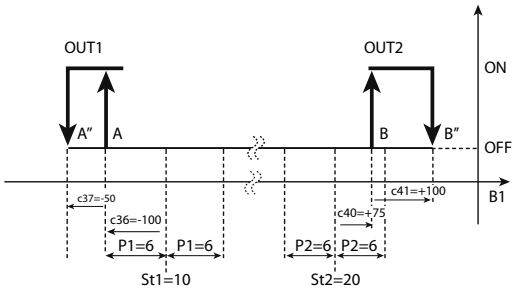

5.5.5 Activation restriction (par. d34,d38,d42,d46)

In normal operating conditions, the activation sequence should be as follows: 1,2,3,4. However, due to minimum on/off times or times between successive activations, the sequence may not be observed. By setting this restriction, the correct sequence is observed even when timers have been set. The output with the activation restriction set to 'x' (1,2,3) will only be activated after the activation of output 'x'. The output with the activation restriction set to 0 will be activated irrespective of the other outputs.

5.5.6 Deactivation restriction (par. d35,d39,d43,d47)

In normal operating conditions, the deactivation sequence should be as follows: 4,3,2,1. However, due to minimum on/off times or times between successive activations, the sequence may not be observed. By setting this restriction, the correct sequence is observed even when timers have been set. The output with the deactivation restriction set to 'x' (1,2,3) will only be deactivated after the deactivation of output 'x'. The output with the deactivation restriction set to 0 will be deactivated irrespective of the other outputs.

5.5.7 Minimum modulating output value (parameters d36,d40,d44,d48)

Valid if the output is the control output and the "type of output"=1, that is, the output is PWM or in case of 0 to 10Vdc output. The modulating output can be limited to a relative minimum value.
Example of **proportional** control: "reverse" mode with St1 =20°C and P1=1°C. If only one modulating output is used with a differential of 1°C, setting this parameter to 20 (20%) will mean the output is only activated when the temperature measured deviates more than 20% of the set point, that is, with values less than 19.8°C.

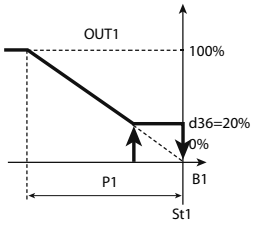

Key			
St1	Set point 1	P1	"Reverse" differential
OUT1	Output 1	d36	Min. value of modulating output 1
B1	Probe 1		

5.5.8 Maximum modulating output value (parameters d37,d41,d45,d49)

Valid if the output is the control output and the "type of output"=1, that is, the output is PWM or in case of 0 to 10Vdc output. The modulating output can be limited to a relative maximum value.
Example of **proportional** control: "reverse" mode with St1 =20°C and P1=1°C. If only one modulating output is used with a differential of 1°C, setting this parameter to 80 (80%) will mean the output is only activated when the temperature measured deviates more than 80% of the set point, that is, with values less than 19.2°C. After this value the output will remain constant.

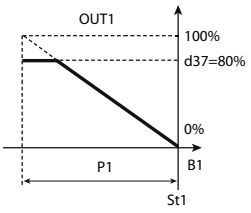

Key	
St1	Set point 1
P1	"Reverse" differential
d37	Maximum value of modulating output 1
OUT1	Output 1
B1	Probe 1

5.5.9 Enable modulating output Cut Off (parameter c68)

This parameter is useful when needing to apply a minimum voltage value for the operation of an actuator.
Enable operation with a minimum limit for the output PWM and 0 to 10 Vdc analogue outputs.

The following must also be set:
- "type of output " =1, modulating output
- minimum modulating output value (par. d36,d40,d44,d48) > 0

Par.	Description	Def	Min	Max	UoM
c68	Enable Cut Off function 0=Cut off enabled 1=Cut off disabled	0	0	1	-

Example: control with two outputs, the first(OUT1) ON/OFF and the second (OUT2) 0 to 10 Vdc;
"minimum value of the modulating output" for output 2= 50 (50% of the output), d40=50.

CASE 1: c68 = 0

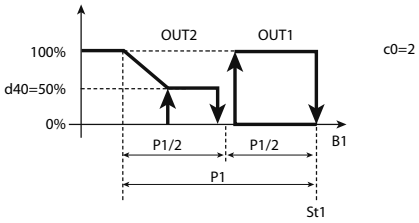

CASE 2: c68 = 1

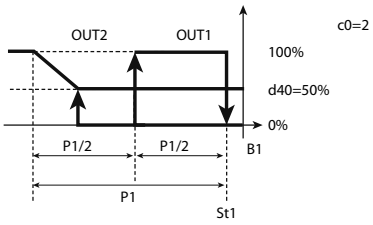

5.6 Additional remarks on special operation

Dead zone P3

In **modes 3, 4** and **5** there is a dead zone defined by P3. The activation or deactivation points cannot be positioned inside the dead zone: if these are identified in the zone before and after the set point, the instrument automatically increases the hysteresis of the output involved by double the value of P3.

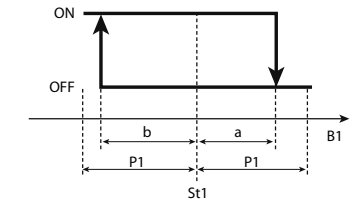

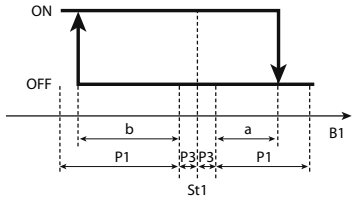

The PWM (or analogue) outputs will follow the operation indicated in the figure. In practice, in the dead zone the output maintains the level of activation unchanged.

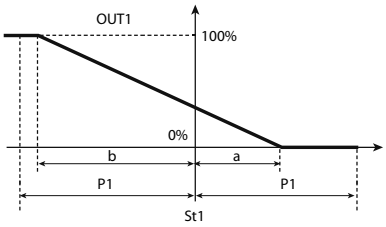

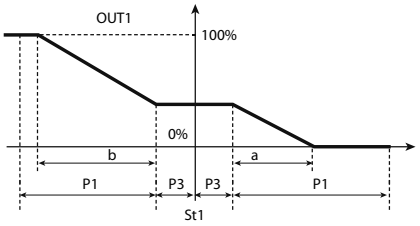

Mode 6 sees the outputs linked to St1 with "direct" logic ("activation" positive and "differential/logic" negative) when digital input 1 is open. The closing of digital input 1 forces the outputs to depend on St2 and P2, and the logic becomes "reverse", by inverting of sign of the "activation" and "differential/logic" parameters (reading the values of the parameters does not depend on the status of the digital input: these only change as regards the algorithm). When c33=1:
- "direct" and "reverse" outputs can be programmed based on "activation" and "differential/logic". The logic defined is valid when digital input 1 is open, the logic is reversed when the contact closes, with the following warnings:
- if "dependence"=2 the output in question will always be linked to St2/ P2; in practice, the "dependence" does not change when the digital input switches.

On the other hand, the logic will always change from "direct" to "reverse", that is, the signs of the "activation" and "differential/logic". parameters are always inverted The figure below represents an example of this. The alarm outputs ("dependence"=3,4 to 14) do not depend on the digital input.

Dependence= 1
INPUT DI1 OPEN INPUT DI1 CLOSED

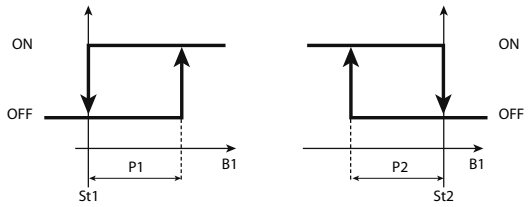

Dependence= 2
INPUT DI1 OPEN INPUT DI1 CLOSED

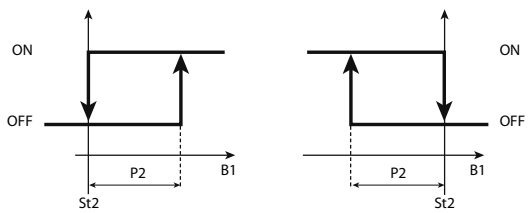

Modes 7 and **8**. For the outputs with "dependence"=2, the changeover of digital input 1 no longer affects the set point, which remains St2, nor the logic (these modes in fact do not feature changes to the logic). The alarm outputs ("dependence"=3, 4 to 14), do not depend on digital input 1.

Modes 1 & **2** in differential operation (c19=1).
In differential operation, St1 must compare against 'B1-B2' instead of B1.
In special operation (c33=1) the outputs can be set with "dependence"=2: differential operation is therefore overridden and the outputs are linked to St2/P2 compared against B1.
Setting "dependence"=3, 4 to 14 obtains an alarm output: the "High" (Er4) and "Low" (Er5) alarms always refer to the main probe B1.
Modes 1 & 2 with "compensation" (operation c19=2, 3, 4).
Similarly to the above, when c33=1 the outputs with "dependence" 2 will be linked to St2/P2; control is based on B1 without compensation using probe B2.
Setting "dependence"=3, 4 to 14 obtains an alarm output using the main probe B1.

5.7 Outputs and inputs

5.7.1 Relay digital outputs (par. c6,c7,d1,c8,c9,c11)

The parameters in question concern the minimum on or off times of the same output or different outputs, so as to protect the loads and avoid swings in control.

For the times set to become immediately operational, the controller needs to be switched off and on again. Otherwise, the timers will become operational when the controller is next used, when the internal timer is set.

5.7.2 Relay output protector (parameters c7,c8,c9)

Par.	Description	Def	Min	Max	UoM
c7	Minimum time between activations of the same relay output Validity: c0 ≠ 4	0	0	15	min
c8	Minimum relay output off time Validity: c0≠ 4	0	0	15	min
c9	Minimum relay output on time Validity: c0 ≠ 4	0	0	15	min

- c9 defines the minimum time the output is activated, regardless of the request.
- c8 defines the minimum time the output is deactivated, regardless of the request
- c7 establishes the minimum time between two following activations of the same output.

c7,c8 & c9 are not operative for the PWM outputs.

5.7.3 Other relay output protectors (parameters c6,d1)

Par.	Description	Def	Min	Max	UoM
c6	Delay between activations of 2 different relay outputs Validity: c0 ≠ 4	5	0	255	s
d1	Minimum time between deactivations of 2 different relay outputs Validity: c0≠ 4	0	0	255	s

- c6 establishes the minimum time that must elapse between successive activations of two different relay outputs. Activation is delayed to avoid overloads on the line due to starting devices too close together or simultaneously.
- d1 establishes the minimum time that must elapse between deactivations of two different outputs.

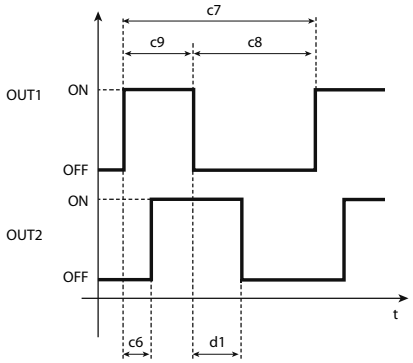

Key	
t	Time

c6 & d1 are not operative for the PWM outputs.

5.7.4 Rotation (parameter c11)

This allows the control outputs to change activation and deactivation priority: based on the requests dictated by the controller, the output that has been active longest is deactivated, or the output that has been off longest is activated.

Par.	Description	Def	Min	Max	UM
c11	Output rotation 0=Rotation not active 1=Standard rotation (on 2 or 4 relays) 2=Rotation 2+2 3=Rotation 2+2 (COPELAND) 4=Rotation of outputs 3 & 4, not 1 & 2 5=Rotation of outputs 1 & 2, not 3 & 4 6=Separate rotation of pairs 1,2 (between each other) and 3,4 7= Rotation of outputs 2,3,4, not 1 Validity : c0=1,2,7,8 & c33=0	0	0	7	-

Rotation 2+2 on 4 outputs (c11=2) has been designed to manage capacity-controlled compressors. Outputs 1 and 3 activate the compressors, outputs 2 and 4 the capacity control valves. Rotation occurs between outputs 1 and 3, while the valves are energised (relays ON) to allow the operation of the compressors at maximum capacity. Valve 2 is linked to output 1 and valve 4 to output 3.

The rotation 2+2 DWM Copeland on 4 outputs (c11=3) is similar to the previous rotation, with the opposite logic for managing the valves. The valves are in fact normally energised (capacity controlled compressor) and are de-energised (relays OFF) when the compressor needs to operate at full power. A normal activation sequence is:

1 off, 2 off, 3 off, 4 off
1 on, 2 on, 3 off, 4 off
1 on, 2 off, 3 off, 4 off
1 on, 2 off, 3 on, 4 on
1 on, 2 off, 3 on, 4 off

As before, in this case too outputs 1 and 3 control the compressors, outputs 2 and 4 the corresponding solenoid valves.
The parameter has no effect on controllers with 1 output.

In the models with two outputs(W), rotation is standard even when c11=2 or 3;
The connection in the 2+2 configuration is as follows: OUT1 = Comp. 1, OUT2 = Valve 1, OUT3 = Comp. 2, OUT4 = Valve 2.

Pay careful attention when programming the parameters, as the controller rotates the outputs according to the logic described above, regardless of whether these are control outputs (PWM) or alarm outputs.

Example a: if there are two alarm and two control outputs, rotation must be set so as to only rotate the control outputs.
Example b: to control a chiller with three compressors, rotation mode 7 can be set, reserving outputs 2, 3 & 4 for the compressors, while output 1 can be unconnected or used as an auxiliary output or alarm output.

5.7.5 SSR (solid state relay) digital outputs

When control is required using on one or more PWM outputs, the solution with relays becomes impractical if the changeover times are not quite high (at least 20 seconds), otherwise the life of the relays will be reduced. In these cases, solid state relays (SSR) can be used, managed according to the specific application.

5.7.6 PWM cycle time (parameter c12)

This represents the total time of the PWM cycle; in fact, the sum of the on time (tON) and the off time (tOFF) is constant and equal to c12. The ratio between ton and toff is established by the control error, that is, the deviation from the set point, referred (as a percentage) to the differential linked to the output. For further details, see mode 4.

Par.	Description	Def	Min	Max	UM
c12	PWM cycle time Validity: c0=4; In special operation c12 is active in any mode if "type of output"=1	20	0.2	999	s

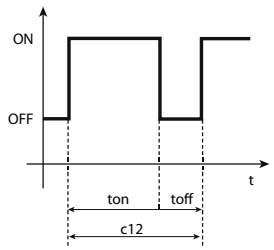

Key:

t	Time

As the action of PWM operation is modulating, PID control can be fully exploited, so that the value coincided with the set point or falls inside the dead zone.

The minimum on time (ton) calculable and the maximum definition achievable for ton is 1/100 of c12(1%).

5.7.7 0 to 10 Vdc analogue outputs

When the application requires one or more 0 to 10 Vdc analogue outputs, the following controllers should be used:

IR33B7****	(1 relay + 1 x 0 to 10Vdc)
IR33E7****	(2 relays + 2 x 0 to 10Vdc)
DN33B7****	(1 relay + 1 x 0 to 10Vdc)
DN33E7****	(2 relays + 2 x 0 to 10Vdc)

In this case too, the system operates with a voltage that ramps from 0 to 10 Vdc.

5.7.8 Analogue inputs

See the start of the chapter, under the paragraph on "Probes".

5.7.9 Digital inputs

Parameter c29 establishes the function of digital input 1 if not already used in modes 6, 7 and 8 or in special operation (c33=1) with "dependence"=16 and 17. When set as an alarm input, that is, c29=1,2,3, one or more alarm outputs are activated according to the mode used (see mode 5), while the action on the control outputs is defined by c31 (see the chapter on "Alarms"). Parameter c30 has a similar meaning to c29 and refers to digital input 2.

Par.	Description	Def	Min	Max	UM
c29	Digital input 1 0=Input not active 1=Immediate external alarm, Automatic reset 2=Immediate external alarm, Manual reset 3=Delayed external alarm (P28), Manual reset 4=Control ON/OFF in relation to status of digital input 5=Start/stop operating cycle from button Validity: c0 other than 6,7,8 & if c33=1 with "dependence"=16 & 17	0	0	5	-
c30	Digital input 2 See c29	0	0	5	-

c29=0 Input not active

c29=1 Immediate external alarm with automatic reset.

The alarm condition relates to the contact being open. When the alarm condition ceases (contact closes), normal control resumes and any alarm output is deactivated.

c29=2 Immediate external alarm with manual reset.

The alarm condition relates to the contact being open. When the alarm condition ceases (contact closes), normal control does not resume automatically, and the audible signal, the alarm code E03 and any alarm output remain active. Control can start again only after a manual reset, that is, after pressing Prg/mute and UP together for 5 seconds.

c29=3 External delayed alarm (delay = P28) with manual reset.

The alarm condition occurs when the contact remains open for a time greater than P28. Once alarm E03 is activated, if the alarm condition ceases (contact closes), normal control does not resume automatically, and the audible signal, the alarm code E03 and any alarm output remain active. Control can start again only after pressing Prg/mute and UP together for 5 seconds.

c29=4 ON/OFF

The digital input establishes the status of the unit:

- with the digital input closed, the controller is ON.
- when the digital input is open the controller is OFF. The consequences of switching OFF are:
  - the display shows the message OFF, alternating with the value of the probe and any alarm codes (E01/E02/E06/E07/E08) active before switching off;
  - the control outputs are deactivated (OFF), while observing any minimum on time (c9)
  - the buzzer, if active, is muted;
  - the alarm outputs, if active, are deactivated
  - any new alarms that arise in this status are not signalled, except for (E01/E02/E06/E07/E08).

c29=5 Start operating cycle.

To start the operating cycle from the button, P70 must be =2 and P29 =5 for digital input 1 and P70=3 and c30=5 for digital input 2.

Parameter c29 is not operative when c0=6, 7, 8, or in special operation (c33=1) when "dependence"=16 and 17. These operating modes in fact exploit digital input 1 to switch the set point and/or the operating logic, therefore any change to the value of this parameter has no affect.

6. CONTROL

ON/OFF and PID control

The controller can operate with two types of control:

- ON/OFF (proportional), in which the actuator either operates at full power or is off. This is a simple control mode that in certain cases can achieve satisfying results;
- PID, useful for systems in which the response of the controlled value compared to the changeable value does allow to eliminate the error in steady operation and improve the regulation. The changeable value becomes an analogue value that continuously varies between 0 and 100%.

⚠ In PID control, the proportional band coincides with the differential (parameters P1/P2).

6.1 Type of control (parameter c32)

Par.	Description	Def	Min	Max	UM
c5	Type control 0=ON/OFF(proportional) 1=Proportional+Integral+Derivative (PID)	0	0	1	-

This parameter is used to set the most suitable type of control for the process in question.

With PID, effective control means the controlled value coincides with the set point or falls within the dead zone; in these conditions, a series of outputs may be active even if not envisaged in the original control diagram. This is the most evident effect of the integral factor.

⚠ PID control, before being applied, requires proportional control only without swings and with good stability in the differentials: only when there is stable P control can PID guarantee maximum effectiveness;

6.2 ti_PID, td_PID (parameters c62,c63)

These are the PID parameters to be set for the application

Par.	Description	Def	Min	Max	UoM
c62	td_PID	600	0	999	s
c63	ti_PID	0	0	999	s

⚠ To eliminate the effect of the integral and derivative factors, set the respective parameters ti and td=0

Setting td=0 and ti ≠ 0 achieves P+I operation, widely used for controlling environments in which the temperature does not have considerable variations.

To eliminate the error in steady operation, PI control can be implemented, as the integral factor reduces the average value of the error. Nonetheless, a high impact of this factor (remember that it contributes in an inversely proportional way to the time 'ti') may increase temperature swings, overshoots and the time taken for the controlled variable to increase and decrease, bringing instability

To resolve such overshoots due to the use of the integral time, the derivative factor can be introduced, which acts as a damper to the swings. Nonetheless, needlessly increasing the derivative factor (increasing the time 'td') increases the time taken for the controlled variable to increase and decrease and can also cause system instability. The derivative factor however has no affect whatsoever on the error in steady operation.

6.3 Auto-Tuning (parameter c64)

The controller leaves the factory with default settings of the PID parameters; these allow standard PID control, but are not optimised for the system that IR33 controls. Consequently, the Auto-Tuning procedure can be used to fine-tune the 3 parameters involved, so as to ensure control that is optimised for the system where it is installed: different systems, with different dynamics, will generate parameters that differ greatly.
Auto-Tuning includes two operating procedures:

- Tuning the controller when commissioning the system.
- Fine-tuning the controller with parameters that have already been tuned, during normal operation.

In both modes, the control first needs to be programmed setting the following parameters:
c0 =1 or 2, that is, "direct" or "reverse" control;
c5 =1, that is, PID control enabled;
c64 =1, that is, Auto-Tuning enabled;
St1= working set point.

Tuning the controller when commissioning the system.
This procedure is performed when commissioning the system, and involves an initial tuning of the PID control parameters to analyse the dynamics of the overall installation; the information acquired is indispensable for both this procedure and any further tuning operations performed.

During commissioning, the system is in a stationary state, that is, it is not powered and is in thermal balance at room temperature; this state must be maintained when programming the controller before starting the Auto-Tuning procedure. The controller must be programmed by setting the parameters specified previously, making sure to avoid starting to control the loads and thus altering the state of the system (that is, increasing or decreasing the temperature). This can be achieved by not connecting the control outputs to the loads or keeping the loads off (not powered). Once programmed, **the controller must be switched off**, if necessary the connections of the outputs to the loads must be restored and finally power connected to the entire system: controller and unit. The controller will then start the Auto-Tuning procedure, identified by the TUNING icon flashing on the display, performing a preliminary check on the starting conditions, and assessing their suitability, that is, for a system in "direct" mode the starting temperature measured by the control probe must be:
-higher than the set point;
-more than 5°C from the set point;
for a system in "reverse" mode, the starting temperature measured by the control probe must be:
-lower than the set point;
-more than 5°C from the set point.

If the starting conditions are not suitable, the procedure will be not be started and the controller will show the corresponding alarm "E14"; the controller will remain in this status without perform any operation, awaiting a reset or until switched off and on again. The procedure can be repeated to check whether the starting conditions have changed and Auto-Tuning can start. If on the other hand the starting conditions are suitable, the controller will start a series of operations that modify the current state of the system, introducing alterations that when measured are used to calculate the most suitable PID parameters for the system in question. In this phase, the temperature reached by the unit may differ considerably from the set point, and may also return to the starting value. At the end of the process (maximum duration of 8 hours), if the outcome is positive, the values calculated for the control parameters will be saved and will replace the default value, otherwise nothing will be saved and the controller will signal an alarm (see the table of alarms), and exit the procedure. In these cases, the signal remains until manually reset or the controller is switched off and on again, while the Auto-Tuning procedure will in any case be terminated and the parameters will not be modified.

Fine-tuning the controller with parameters that have already been tuned, during normal operation.
If the controller has already been tuned a first time, the Auto-Tuning

procedure can be repeated to further tune the values. This is useful when the loads have changed since the first procedure was performed, or to allow finer tuning. The controller in this case can manage the system using the PID parameters, and further Auto-Tuning will have the effect of improving control.
This time, the procedure can be started during normal control of the system (with c0 =1 or 2, that is, control in "direct" or "reverse" mode, and c5 =1, that is, PID control enabled); the controller in this case does not need to be switched off and on again; simply:
-set parameter c64 to 1;
-press the ▲ button for 5 seconds, after which the unit will display the message "**tun**" and Auto-Tuning will start.
The controller then proceeds with Auto-Tuning as already described above. In both modes described, if the procedure ends positively, the controller will automatically set parameter c64 to zero and will activate PID control with the new parameters saved.

The Auto-Tuning procedure should not be considered essential in achieving optimum control of the system; experienced users can also achieve excellent results by setting the parameters manually.

For users experienced in operating the IR32 Universal family controllers in P+I mode, simply set c5=1 (that is, PID control enabled) and use the default values of the parameters, thus replicating the behaviour of the previous model of controller.

6.4 Operating cycle

The operating cycle is an automatic program that can have a maximum of 5 set points to be reached in the 5 respective time intervals. This may be useful for automating processes in which the temperature must follow a set profile for a certain time (e.g. milk pasteurisation).

The operating cycle is started from the keypad, digital input or automatically by RTC. See the chapter on the "User interface".

The opening of the digital inputs does not affect the operating cycle, which continues as defined by the program.

If the duration of step x, (P73, P75, P77, P79) is set a zero, it means that the controller only manages the temperature. The controller will try to reach the set temperature in the shortest possible time, after which it will go to the next step. On the contrary, P71 must be set ≠ 0. With duration of the step ≠ 0, the controller will try to reach the set temperature in the established time, and then anyway it will go on to the next step.

Par.	Description	Def	Min	Max	UoM
P70	Enable operating cycle 0=Disabled 1=Keypad 2=Digital input 3=RTC	0	0	3	-
P71	Oper. cycle: duration of step 1	0	0	200	min
P72	Operating cycle: temperature set point step 1	0	-50	150	°C/°F
P73	Oper. cycle: duration of step 2	0	0	200	min
P74	Operating cycle: temperature set point step 2	0	-50	150	°C/°F
P75	Oper. cycle: duration of step 3	0	0	200	min
P76	Operating cycle: temperature set point step 3	0	-50	150	°C/°F
P77	Oper. cycle: duration of step 4	0	0	200	min
P78	Operating cycle: temperature set point step 4	0	-50	150	°C/°F
P79	Oper. cycle: duration of step 5	0	0	200	min
P80	Operating cycle: temperature set point step 5	0	-50	150	°C/°F

Example 1: Heating cycle with infinite temperature control

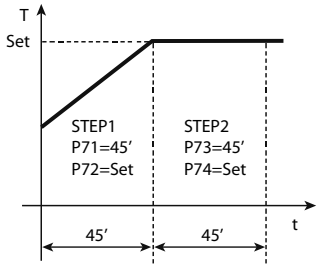

Example 2: Heating cycle with intermediate pauses and stop at the end

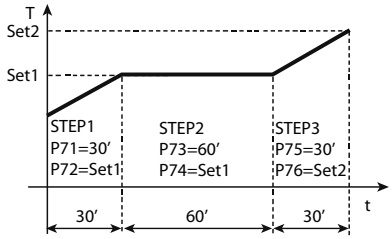

Example 3: Low pasteurisation cycle

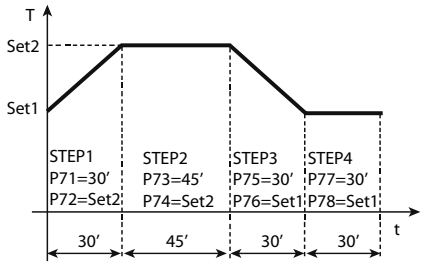

Example 4: High pasteurisation cycle

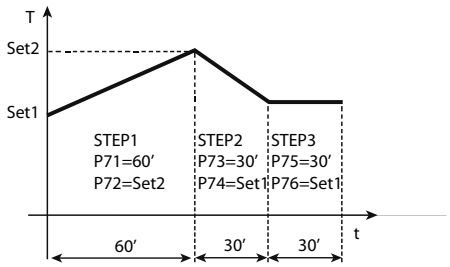

Key	
T	Temperature
t	Time

6.5 Operation with probe 2

Installing probe 2 allows various types of operation to be enabled, selected using parameter c19

6.5.1 Differential operation (parameter c19=1)

The second probe (B2) must be installed. Control is performed by comparing the set point St1 against the difference between the two probes (B1-B2). In practice, the controller acts so that the difference B1-B2 is equal to St1. As mentioned, the management of the second probe is only available in modes c0=1 & 2.
"Direct" operation (c0=1) is suitable for applications in which the controller needs to stop the difference B1-B2 from increasing.
"Reverse" operation (c0=2), on the other hand, stops the difference B1-B2 from decreasing. Below are some examples of applications.

Example 1:
A refrigeration unit with 2 compressors must lower the temperature of the water by 5°C.

Introduction: having selected a controller with 2 outputs to manage the 2 compressors, the first problem to be faced relates to the positioning of probes B1 and B2. Remember that any temperature alarms can only refer to the value read by probe B1. The example indicates the inlet temperature as T1 and the outlet temperature as T2.

Solution 1a: install B1 on the water inlet if it is more important to control the inlet temperature T1; that will allow alarm signals, where necessary delayed, relating to a "High" inlet temperature T1. For example, when B1=T1 the set point corresponds to "B1-B2", i.e. "T1-T2", and must be equal to +5°C (St1=5). The operating mode will be "reverse" (c0=2), given that the controller activates the outputs as the value of "T1-T2" decreases, and tends towards 0. Choosing a differential equal to 2°C (P1=2), a high temperature threshold equal to 40°C (P26=40) and a delay of 30 minutes (P28=30), the operation will be as described in the following figure.



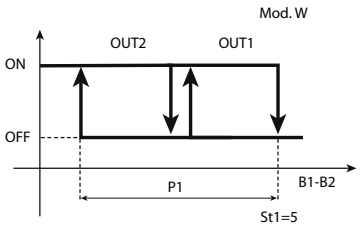

Solution 1b: if on the other hand priority is attributed to T2 (e.g. "Low temperature" threshold 6°C with a one minute delay), the main probe, B1, must be set as the outlet temperature. With these new conditions, the set point St1, equal to "B1-B2", i.e. 'T2-T1', must now be set to -5°C. The operating mode will be "direct" (c0=1), given that the controller must activate the outputs as the value of 'T2-T1' increases, and from -5 tends towards 0. P25=6 and P28=1(min) activate the "Low temperature" alarm, as shown in the new control logic diagram:



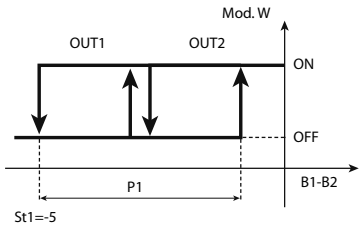

Example 1 (continued)
Example 1 can be resolved using "special" operation (c33=1). Starting from solution 1b (T2 must be 5°C less than T1). The main probe is located at the outlet (T2 =B1).
These requirements also need to be satisfied:
• the outlet temperature T2 must remain above 8°C;
• if T2 remains below 6°C for more than one minute, a "Low temperature" alarm must be signalled.

Solution: use a controller with 4 outputs (IR33Z****); two outputs are used for control (OUT3 and OUT4), and one for the remote alarm signal (OUT1). OUT2 will be used to deactivate outputs OUT3 and OUT4 when T2< 8°C. To do this, simply connect OUT2 in series with OUT3 and OUT4, then make OUT2 active only when B1 (T2) is greater than 8°C.
Set c33=1: the changes to be made to the special parameters are:

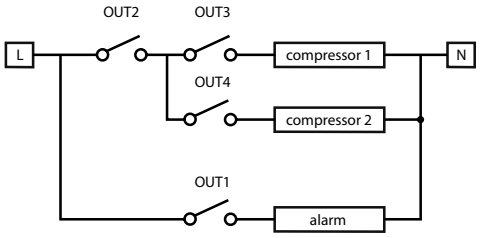

Output 1: must be programmed as an alarm output that is active only for the "Low temperature" alarm. Set "dependence"=c34, which changes from 1 to 9 (or 10 to use normally ON relays). The other parameters for output 1 are not relevant and remain unchanged.
Output 2: this becomes detached from differential operation, changing the "dependence" from 1 to 2: "dependence"=c38=2. The logic is "direct" and includes all of P2, therefore "activation" =c40 becomes 100, and "differential/logic"=c41 becomes -100. St2 will obviously be set to 8 and P2 represents the minimum variation required to restart control, once it has stopped due to "Low temperature", e.g. P2=4.
Output 3 and Output 4: in the controllers with 4 outputs, mode 1 assigns each output an hysteresis of 25% of the differential P1. In the example, considering that 2 outputs are used for control, the hysteresis for each output must be 50% of P1. The "activation" and "differential/logic" parameters for the outputs must be changed to suit the new situation.
In practice, this means setting:
Output 3:
"activation"=c44 changes from 75 to 50
"differential/logic"=c45, changes from -25 to -50.
Output 4:
"activation"=c48 remains at 100
"differential/logic" = c49 changes from -25 to -50.
The diagram summarises the controller operating logic.

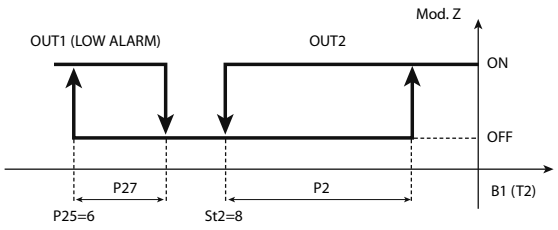

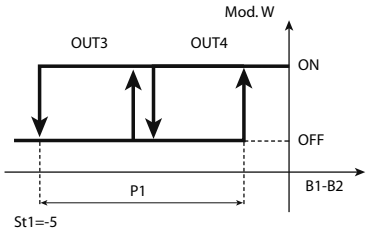

6.5.2 Compensation

The compensation function is used to modify the control set point St1 according to the reading of the second probe B2 and the reference set point St2. Compensation has a weight equal to c4, called the "authority".
The compensation function can only be activated when c0=1,2.

When compensation is in progress, parameter St1 remains at the set value; on the other hand, the operating value of St1 changes, known as the effective St1, that is, the value used by the control algorithm. The effective St1 is also restricted by the limits c21 and c22 (minimum and maximum value of St1); these two parameters guarantee that St1 does not reach undesired values.

6.5.3 Compensation in cooling (parameter c19=2)

Compensation in cooling may either increase or decrease the value of St1, depending on whether c4 is positive or negative.

St1 only changes if the temperature B2 exceeds St2:
• if B2 is greater than St2 then: effective St1 = St1 + (B2-St2)*c4
• if B2 is less than St2: effective St1 = St1

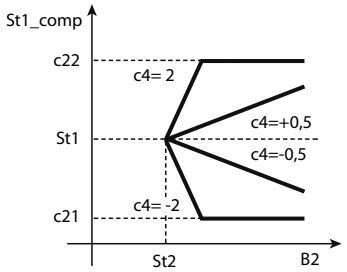

Key:	
St1_comp	Effective set point 1
B2	Outside probe
c4	Authority
c21	Minimum value of set point 1
c22	Maximum value of set point 1

Example 1:
The bar in a service station needs to be air-conditioned so that the temperature is summer is around 24°C. To prevent the customers, who only stay for a few minutes, from experiencing considerable differences in temperature, the inside temperature is linked to the outside temperature, that is, it increases proportionally up to a maximum value of 27°C, when the outside temperature is 34°C or higher.

Solution: a controller is used to manage a direct expansion air/air unit. The main probe B1 is installed in the bar, the controller works in mode c0=1 (direct) with set point=24°C (St1=24) and differential e.g. 1°C (P1=1). To exploit compensation in cooling mode, install probe B2 outside and set c19=2. Then set St2=24, given that the requirement is to compensate set point 1 only when the outside temperature exceeds 24 °C. The authority c4 must be 0.3, so that with variations in B2 from 24 to 34°C, St1 changes from 24 to 27°C. Finally, select c22=27 to set the maximum value for the effective St1. The graph shows how St1 changes according to the temperature B2.

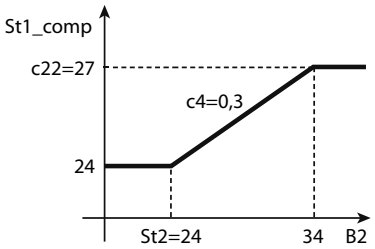

Key:	
St1_comp	Effective set point 1
B2	Outside probe
c4	Authority
c22	Maximum value of set point 1

Example 2:
This example involves compensation in cooling with a negative c4. The air-conditioning system consists of a water chiller and some fan coil units. When the outside temperature is below 28°C, the chiller inlet temperature can be fixed at St1=13°C. If the outside temperature increases, to compensate for the greater thermal load, the inlet temperature can be lowered down to a minimum limit of 10°C, reached when the temperature is greater than or equal to 34°C.
Solution: the parameters to be set on the controller, with one or more outputs in relation to the characteristics of the chiller, will be as follows:
• c0=1, main probe B1 on the chiller inlet, with a main control set point St1=13°C and differential P1=2.0°C.

For compensation in cooling: c19=2, enabled for outside temperatures, measured by B2, greater than 28°C, therefore St2=28. The authority, considering that St1 must be lowered by 3°C in response to a variation in B2 of 6°C (34-28), will be c4= -0.5. Finally, to prevent the inlet temperature from falling below 10°C, a minimum limit must be set for St1, with c21=10. The graph below shows the trend in St1.

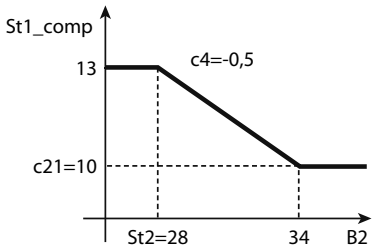

Key:	
St1_comp	Effective set point 1
B2	Outside probe
c4	Authority
c21	Minimum value of set point 1

6.5.4 Compensation in heating (parameter c19=3)

Compensation in heating can increase or decrease the value of St1 depending on whether c4 is negative or positive respectively.
St1 only varied if the temperature B2 is less than St2:
• if B2 is lower than St2 then: effective St1 = St1 + (B2-St2)*c4
• if B2 is greater than St2: effective St1 = St1

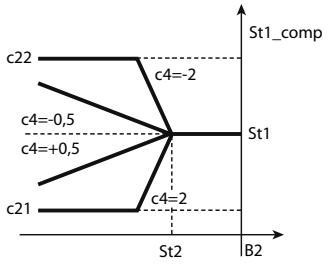

Key:	
St1_comp	Effective set point 1
B2	Outside probe
c4	Authority
c21	Minimum value of set point 1
c22	Maximum value of set point 1

Example 4:
The design specifications are as follows: in order to optimise the efficiency of a boiler in a home heating system, the operating temperature (St1) can be set at 70°C for outside temperatures above 15°C. When the outside temperature drops, the operating temperature of the boiler must increase proportionally, until reaching ad a maximum temperature of 85°C when the outside temperature is less than or equal to 0°C.
Solution: use a controller with the main probe B1 on the water circuit, mode 2 (heating), set point St1=70 and differential P1=4. In addition, probe B2 must be installed outside and compensation enabled in heating (c19=3) with St2=15, so that the function is only activated when the outside temperature is less than 15°C. To calculate the authority", consider that in response to a variation in B2 of -15°C (from +15 to 0°C), St1 must change by +15°C (from 70°C to 85°C), so c4= -1.
Finally, set the maximum limit for St1, selecting c22=85°C. The following graph shows how St1 varies as the outside temperature measured by B2 decreases.

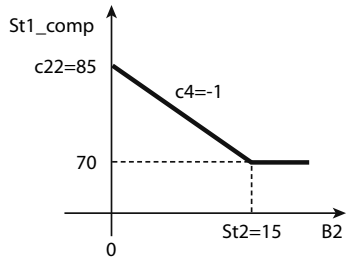

Key:	
St1_comp	Effective set point 1
B2	Outside probe
c4	Authority
c22	Maximum value of set point 1

6.5.5 Continuous compensation (parameter c19=4)

The compensation of St1 is active for values of B2 other than St2: with this value of c19, parameter P2 can be used to define a dead zone around St2 in which compensation is not active, that is, when the value read by B2 is between St2-P2 and St2+P2, compensation is disabled and St1 is not changed:
if B2 is greater than (St2+P2), effective St1 = St1+ [B2-(St2+P2)]*c4
if B2 is between (St2-P2) and (St2+P2), effective St1 =St1
if B2 is less than (St2-P2), effective St1 = St1+ [B2-(St2-P2)]*c4
Compensation using c19=4 is the combined action of compensation in cooling and compensation in heating, as described above. The following diagrams show continuous compensation for positive and negative values of c4. Neglecting the effect of P2, if c4 is positive St1 increases when B2>St2 and decreases when B2<St2. Vice-versa, if c4 is negative St1 decreases when B2 > St2 and increases when B2 is below St2.

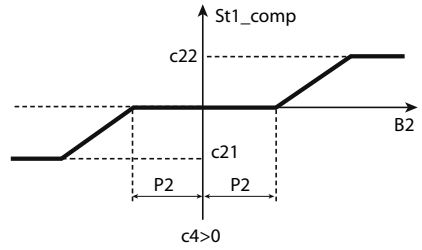

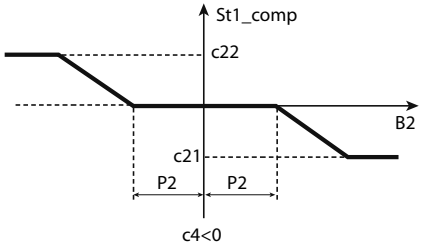

Key:	
St1_comp	Effective set point 1
B2	Outside probe
c4	Authority
c22	Maximum value of set point 1
c21	Minimum value of set point 1

6.5.6 Enable logic on absolute set point & differential set point (parameter c19=5,6)

When c19=5 the value read by probe B2 is used to enable control logic in both direct and reverse mode.
If c19=6 the value considered is B2-B1.

Par.	Description	Def	Min	Max	UoM
c19	Operation of probe 2 5=enable logic on absolute set point 6=enable logic on differential set point Validity: c0=1 or 2	0	0	6	-
c66	Enabling direct threshold Validity: c0=1 or 2	-50	-50	150	°C/°F
c67	Enabling reverse threshold Validity: c0=1 or 2	150	-50	150	°C/°F

"Reverse" control with enabling of "direct" logic:
Looking at the example of a controller with two outputs, one of which ON/OFF and the other 0 to 10 Vdc. When the temperature read by probe B2, if c19=5, or the difference B2-B1, if c19=6, exceeds the threshold c66 (plus an hysteresis of 1.5°C to avoid swings), control is enabled on St1 and P1; below this temperature, control is disabled.

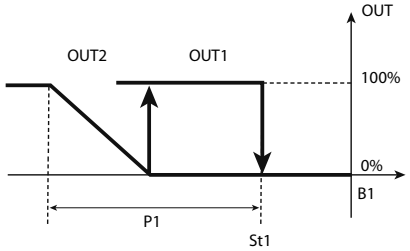

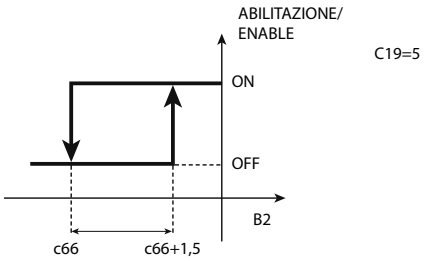

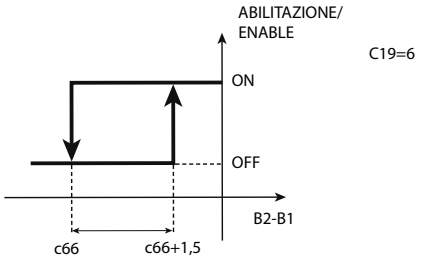

"Direct" control with enabling of "reverse" logic:
In this case too, a controller with two outputs, one of which a ON/OFF and the other 0 to 10 Vdc. When the temperature read by probe B2, if c19=5 or the difference B2-B1, if c19=6, falls below the threshold c67 (beyond an hysteresis of 1.5°C to avoid swings), control is enabled on St1 and P1; above this temperature, control is disabled.

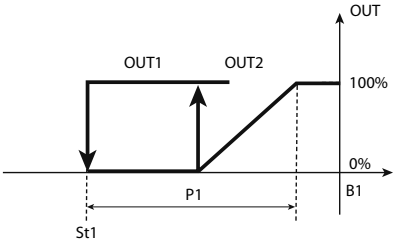

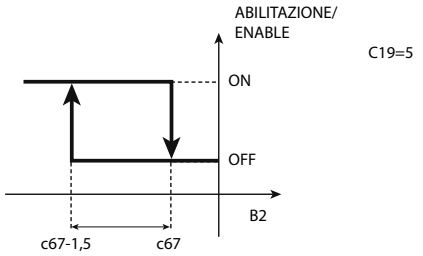

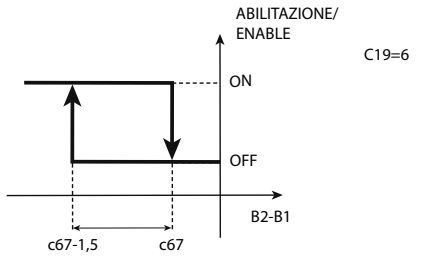

6.5.7 Using the CONV0/10A0 module (accessory)

This module converts a 0 to 12 Vdc PWM signal for solid state relays to a linear 0 to 10 Vdc and 4 to 20 mA analogue signal.
Programming: to get the modulating output signal, the PWM control mode is used (see the explanation for parameter c12). The PWM signal is reproduced exactly as an analogue signal: the percentage ON time corresponds to the percentage of the maximum output signal. The optional CONV0/10A0 module integrates the signal provided by the controller: the cycle time (c12) must be reduced to the minimum value available, **that is, c12=0.2 s**. As concerns the control logic ("direct"=cooling, "reverse"=heating), the same observations seen for PWM operation apply (see mode 4): the PWM activation logic is faithfully reproduced as an analogue signal. If, on the other hand, a custom configuration is required, refer to the paragraphs on special operation ("type of output", "activation", "differential/logic" parameters).

7. TABLE OF PARAMETERS

Par.	Description	Note	Def	Min	Max	UoM	Type	CAREL SVP	ModBus®	R/W	Icon
St1	Set point 1		20	c21	c22	°C/°F	A	3	4	R/W	
St2	Set point 2		40	c23	c24	°C/°F	A	4	5	R/W	
c0	Operating mode 1=direct 2=reverse 3=dead zone 4=PWM 5=alarm 6=direct/reverse from digital input1 7=direct: set point & differential from digital input 1 8=reverse: set point & differential from digital input 1 9=direct & reverse with seperate set points.		2	1	9	-	I	39	112	R/W	
P1	Set point differential 1		2	0.1	50	°C/°F	A	5	6	R/W	
P2	Set point differential 2		2	0.1	50	°C/°F	A	6	7	R/W	
P3	Dead zone differential		2	0	20	°C/°F	A	7	8	R/W	
c4	Authority. Validity : mode 1 or 2		0.5	-2	2	-	A	8	9	R/W	
c5	Type control 0=ON/OFF (Proportional) 1=Proportional+Integral+Derivative (PID)		0	0	1	-	D	163	25	R/W	
c6	Delay between activations of 2 different relay outputs Validity: c0≠ 4		5	0	255	s	I	40	113	R/W	
c7	Minimum time between activations of same relay output Validity: c0 ≠ 4		0	0	15	min	I	41	114	R/W	
d1	Minimum time between deactivations of 2 diff. relay outputs Validity: c0 ≠ 4		0	0	255	s	I	42	115	R/W	
c8	Minimum relay output off time Validity: c0 ≠ 4		0	0	15	min	I	43	116	R/W	
c9	Minimum relay output on time Validity: c0 ≠ 4		0	0	15	min	I	44	117	R/W	
c10	Status of control outputs with probe alarm 0=All outputs OFF 1= All outputs ON 2="Direct" outputs on, "reverse" outputs off 3= "Reverse" outputs on, "direct" outputs off		0	0	3	-	I	45	118	R/W	
c11	Output rotation 0=Rotation not active 1=Standard rotation (with 2 o 4 relays) 2=Rotation 2+2(compressors on relays 1 & 3) 3=Rotation 2+2 only for models with 4 outputs (Z & A) 4=Rotation of outputs 3 & 4, not 1 & 2 5=Rotation of outputs 1 & 2, not 3 & 4 6=Separate rotation of pairs 1,2 (with each other) & 3,4 7=Rotation of outputs 2,3,4, not output 1 Validity: c0=1,2,7,8 & c33=0		0	0	7	-	I	46	119	R/W	
c12	PWM cycle time		20	0.2	999	s	A	9	10	R/W	
c13	Type of probe 0=NTC standard range(-50T+90°C) 1=NTC enhanced range(-40T+150°C) 2=PTC standard range(-50T+150°C) 3=Pt1000 standard range(-50T+150°C)		0	0	3	-	I	47	120	R/W	
P14	Calibration of probe 1		0	-20	20	°C/°F	A	10	11	R/W	
P15	Calibration of probe 2		0	-20	20	°C/°F	A	11	12	R/W	
c17	Probe disturbance filter		4	1	15	-	I	48	121	R/W	
c18	Temperature unit of measure 0=°C 1=°F		0	0	1	-	D	164	26	R/W	
c19	Operation of probe 2 0=not enabled 1=differential operation 2=compensation in cooling 3=compensation in heating 4=compensation always active 5=enable logic on absolute set point(*) 6= enable logic on differential set point(*) Validity: c0 =1,2		0	0	6	-	I	49	122	R/W	
c21	Minimum value of set point 1		-50	-50	c22	°C/°F	A	14	15	R/W	
c22	Maximum value of set point 1		60	c21	150	°C/°F	A	15	16	R/W	
c23	Minimum value of set point 2		-50	-50	c24	°C/°F	A	16	17	R/W	
c24	Maximum value of set point 2		60	c23	150	°C/°F	A	17	18	R/W	
P25	Low temperature alarm threshold if P29=0, P25=0: threshold disabled if P29=1, P25=-50: threshold disabled		-50	-50	P26	°C/°F	A	18	19	R/W	▲

Par.	Description	Note	Def	Min	Max	UoM	Typ.	CAREL SVP	ModBus®	R/W	Icon
P26	High temperature alarm threshold if P29=0, P26=0 : threshold disabled if P29=1, P26=200 : threshold disabled		150	P25	150	°C/°F	A	19	20	R/W	▲
P27	Alarm differential		2	0	50	°C/°F	A	20	21	R/W	▲
P28	Alarm delay time		120	0	250	min	I	50	123	R/W	▲
P29	Type of alarm threshold 0=relative; 1=absolute		1	0	1	-	D	165	27	R/W	▲
c29	Digital input 1 0=Input not active 1=Immediate external alarm, automatic reset 2=Immediate external alarm, manual reset 3=Delayed external alarm(P28), manual reset 4=Control ON/OFF in relation to status of digital input 5=Start/stop operating cycle from button Validity: c0 other than 6,7, & if c33= with "dependence"=16 & 17. With alarm, the status of the relays depends on c31		0	0	5	-	I	51	124	R/W	▲
c30	Digital input 2 See c29		0	0	5	-	I	52	125	R/W	🔧
c31	Status of control outputs with alarm from digital input 0= All outputs OFF 1= All outputs ON 2= "Reverse" outputs OFF, others unchanged 3= "Direct" outputs OFF, others unchanged		0	0	3	-	I	53	126	R/W	🔧
c32	Serial connection address		1	0	207	-	I	54	127	R/W	🔧
c33	Special operation 0=Disabled 1= Enabled (Before changing, make sure the desired start mode (c0) has been selected and programmed)		0	0	1	-	D	166	28	R/W	🔧
c34	Dependence of output 1 0=output not enabled 1=control output (St1,P1) 2=control output (St2,P2) 3=alarm from digital input (relay OFF) 4= alarm from digital input (relay ON) 5= serious alarms & E04 (relay OFF) 6= serious alarms & E04 (relay ON) 7= serious alarms & E05 (relay OFF) 8= serious alarms & E05 (relay ON) 9= alarm E05 (relay OFF) 10= alarm E05 (relay ON)) 11=alarm E04 (relay OFF)) 12=alarm E04 (relay ON) 13=serious alarm(relay OFF) 14= serious alarm(relay ON) 15=timer 16=control output with change set point & reverse operating logic from digital input 1 17=control output with change set point & maintain operating logic from digital input 1		1	0	17	-	I	55	128	R/W	1
c35	Type of output 1		0	0	1	-	D	167	29	R/W	1
c36	Activation of output 1		-25	-100	100	%	I	56	129	R/W	1
c37	Differential/logic of output 1		25	-100	100	%	I	57	130	R/W	1
d34	Activation restriction for output 1		0	0	3	-	I	58	131	R/W	1
d35	Deactivation restriction for output 1		2	0	4	-	I	59	132	R/W	1
d36	Minimum value of modulating output 1(*)		0	0	100	%	I	60	133	R/W	1
d37	Maximum value of modulating output 1(*)		100	0	100	%	I	61	134	R/W	1
c38	Dependence of output 2		1	0	17	-	I	62	135	R/W	2
c39	Type of output 2		0	0	1	-	D	168	30	R/W	2
c40	Activation of output 2		-50	-100	100	%	I	63	136	R/W	2
c41	Differential/logic of output 2		25	-100	100	%	I	64	137	R/W	2
d38	Activation restriction for output 2		1	0	3	-	I	65	138	R/W	2
d39	Deactivation restriction for output 2		3	0	4	-	I	66	139	R/W	2
d40	Minimum value of modulating output 2(*)		0	0	100	%	I	67	140	R/W	2
d41	Maximum value of modulating output 2(*)		100	0	100	%	I	68	141	R/W	2
c42	Dependence of output 3		1	0	17	-	I	69	142	R/W	3
c43	Type of output 3		0	0	1	-	D	169	31	R/W	3
c44	Activation of output 3		-75	-100	100	%	I	70	143	R/W	3
c45	Differential/logic of output 3		25	-100	100	%	I	71	144	R/W	3
d42	Activation restriction for output 3		2	0	3	-	I	72	145	R/W	3
d43	Deactivation restriction for output 3		4	0	4	-	I	73	146	R/W	3
d44	Minimum value of modulating output 3(*)		0	0	100	%	I	74	147	R/W	3
d45	Maximum value of modulating output 3(*)		100	0	100	%	I	75	148	R/W	3
c46	Dependence of output 4		1	0	17	-	I	76	149	R/W	4
c47	Type of output 4		0	0	1	-	D	170	32	R/W	4

Par.	Description	Note	Def	Min	Max	UoM	Typ.	CAREL SVP	ModBus®	R/W	Icon
c48	Activation of output 4		-100	-100	100	%	I	77	150	R/W	4
c49	Differential/logic of output 4		25	-100	100	%	I	78	151	R/W	4
d46	Activation restriction for output 4		3	0	3	-	I	79	152	R/W	4
d47	Deactivation restriction for output 4		0	0	4	-	I	80	153	R/W	4
d48	Minimum value of modulating output 4(*)		0	0	100	%	I	81	154	R/W	4
d49	Maximum value of modulating output 4(*)		100	0	100	%	I	82	155	R/W	4
c50	Disable keypad and remote control		1	0	2	-	I	83	156	R/W	
c51	Code for enabling the remote control 0=Programming from remote control without code		1	0	255	-	I	84	157	R/W	
c52	Display 0=Probe 1 1=Probe 2 2=Digital input 1 3=Digital input 2		0	0	3	-	I	85	158	R/W	
c53	Buzzer 0=Enabled 1=Disabled		0	0	1	-	D	171	33	R/W	
c56	Delay at start-up		0	0	255	s	I	86	159	R/W	
c57	Soft start(*)		0	0	99	min	I	87	160	R/W	
c62	ti_PID		600	0	999	s	I	88	161	R/W	TUNING
c63	td_PID		0	0	999	s	I	89	162	R/W	TUNING
c64	Auto-Tuning 0=Disabled 1=Enabled		0	0	1	-	D	172	34	R/W	TUNING
c66	Enabling direct threshold(*) Validity: c0 =1,2		-50	-50	150	°C/°F	A	21	22	R/W	
c67	Enabling reverse threshold(*) Validity: c0 =1,2		150	-50	150	°C/°F	A	22	23	R/W	
c68	Enable Cut off operation 0=Cut off enabled 1=Cut off disabled		0	0	1	-	D	173	35	R/W	
P70	Enable operating cycle 0=Disabled 1=Keypad 2=Digital input 3=RTC		0	0	3	-	I	97	170	R/W	
P71	Operating cycle: duration of step 1		0	0	200	min	I	98	171	R/W	
P72	Operating cycle: temperature set point step 1		0	-50	150	°C/°F	A	23	24	R/W	
P73	Operating cycle: duration of step 2		0	0	200	min	I	99	172	R/W	
P74	Operating cycle: temperature set point step 2		0	-50	150	°C/°F	A	24	25	R/W	
P75	Operating cycle: duration of step 3		0	0	200	min	I	100	173	R/W	
P76	Operating cycle: temperature set point step 3		0	-50	150	°C/°F	A	25	26	R/W	
P77	Operating cycle: duration of step 4		0	0	200	min	I	101	174	R/W	
P78	Operating cycle: temperature set point step 4		0	-50	150	°C/°F	A	26	27	R/W	
P79	Operating cycle: duration of step 5		0	0	200	min	I	102	175	R/W	
P80	Operating cycle: temperature set point step 5		0	-50	150	°C/°F	A	27	28	R/W	
AL0	Date – time of alarm 0 (press Set) (y=year ,M=month,d=day,h=hours,m=minutes)		-	-	-	-	-	-	-	R	
y	AL0_y = year of alarm 0		0	0	99	year	I	103	176	R	
M	AL0_M = month of alarm 0		0	1	12	month	I	104	177	R	
d	AL0_d = day of alarm 0		0	1	31	day	I	105	178	R	
h	AL0_h = hours of alarm 0		0	0	23	hours	I	106	179	R	
m	AL0_m = minutes of alarm 0		0	0	59	minutes	I	107	180	R	
E	AL0_t = type of alarm 0		0	0	99	-	I	108	181	R	
AL1	Date – time of alarm 1 (press Set) (y=year ,M=month,d=day,h=hours,m=minutes)		-	-	-	-	-	-	-	R	
y	AL1_y = year of alarm 1		0	0	99	year	I	109	182	R	
M	AL1_M = month of alarm 1		0	1	12	month	I	110	183	R	
d	AL1_d = day of alarm 1		0	1	31	day	I	111	184	R	
h	AL1_h = hours of alarm 1		0	0	23	hours	I	112	185	R	
m	AL1_m = minutes of alarm 1		0	0	59	minutes	I	113	186	R	
E	AL1_t = type of alarm 1		0	0	99	-	I	114	187	R	
AL2	Date – time of alarm 2 (press Set) (y=year ,M=month,d=day,h=hours,m=minutes)		-	-	-	-	-	-	-	R	
y	AL2_y = year of alarm 2		0	0	99	year	I	115	188	R	
M	AL2_M = month of alarm 2		0	1	12	month	I	116	189	R	
d	AL2_d = day of alarm 2		0	1	31	day	I	117	190	R	
h	AL2_h = hours of alarm 2		0	0	23	hours	I	118	191	R	
m	AL2_m = minutes of alarm 2		0	0	59	minutes	I	119	192	R	
E	AL2_2 = type of alarm 2		0	0	99	-	I	120	193	R	
AL3	Date – time of alarm 3 (press Set) (y=year ,M=month,d=day,h=hours,m=minutes)		-	-	-	-	-	-	-	R	
y	AL3_y = year of alarm 3		0	0	99	year	I	121	194	R	
M	AL3_M = month of alarm 3		0	1	12	month	I	122	195	R	
d	AL3_d = day of alarm 3		0	1	31	day	I	123	196	R	
h	AL3_h = hours of alarm 3		0	0	23	hours	I	124	197	R	
m	AL3_m = minutes of alarm 3		0	0	59	minutes	I	125	198	R	
E	AL3_t = type of alarm 3		0	0	99	-	I	126	199	R	

Par.	Description	Note	Def	Min	Max	UoM	Type	CAREL SVP	ModBus®	R/W	Icon
AL4	Date – time of alarm 4 (press Set) (y=year ,M=month,d=day,h=hours,m=minutes)		-	-	-	-	I	-	-	R	
y	AL4_y = year of alarm 4		0	0	99	year	I	127	200	R	
M	AL4_M = month of alarm 4		0	1	12	month	I	128	201	R	
d	AL4_d = day of alarm 4		0	1	31	day	I	129	202	R	
h	AL4_h = hours of alarm 4		0	0	23	hours	I	130	203	R	
m	AL4_m = minutes of alarm 4		0	0	59	mins.	I	131	204	R	
E	AL4_t = type of alarm 4		0	0	99	-	I	132	205	R	
ton	Switch device on (press Set) (d=day ,h=hour, m=minutes)		-	-	-	-	-	-	-	R	
d	tON_d = on day		0	0	11	day	I	133	206	R/W	
h	tON_h = on hours		0	0	23	hours	I	134	207	R/W	
m	tON_m = on minutes		0	0	59	mins.	I	135	208	R/W	
toff	Switch device off (press Set) (d=day ,h=hour, m=minutes)		-	-	-	-	-	-	-	R	
d	tOFF_d = off day		0	0	11	day	I	136	209	R/W	
h	tOFF_h = off hours		0	0	23	hours	I	137	210	R/W	
m	tOFF_m = off minutes		0	0	59	mins	I	138	211	R/W	
tc	Date – time (press Set) (y=year, M=month, d=day of month, u=day of week, h=hours, m=minutes)		-	-	-	-	-	-	-	R	
y	Date: year		0	0	99	year	I	28	101	R/W	
M	Date: month		1	1	12	month	I	29	102	R/W	
d	Date: day		1	1	31	day	I	30	103	R/W	
u	Date: day of the week (Monday, ...)		1	1	7	day	I	31	104	R/W	
h	Hours		0	0	23	hours	I	32	105	R/W	
M	Minutes		0	0	59	mins.	I	33	106	R/W	

(*) Functions active starting from software version higher than 1.0.

The default, minimum and maximum values of the temperature parameter refer to the unit of measure in °C. If changing the unit of measure, the corresponding values must be entered.

7.1 Variables only accessible via serial connection

Description	Def	Min	Max	UoM	Typ.	CAREL SVP	ModBus®(*)	R/W	Description
Reading of probe 1	0	0	0	°C/°F	A	1	2	R_TYPE	Reading of probe 1
Reading of probe 2	0	0	0	°C/°F	A	2	3	R_TYPE	Reading of probe 2
Status of output 1	0	0	1	-	D	139	1	R_TYPE	Status of relay 1
Status of output 2	0	0	1	-	D	140	2	R_TYPE	Status of relay 2
Status of output 3	0	0	1	-	D	141	3	R_TYPE	Status of relay 3
Status of output 4	0	0	1	-	D	142	4	R_TYPE	Status of relay 4
Status of digital input 1	0	0	1	-	D	144	6	R_TYPE	Status of digital input 1
Status of digital input 2	0	0	1	-	D	145	7	R_TYPE	Status of digital input 2
Probe 2 fault alarm	0	0	1	-	D	148	10	R_TYPE	Probe 2 fault alarm
Immediate external alarm	0	0	1	-	D	149	11	R_TYPE	Immediate external alarm
High temperature alarm	0	0	1	-	D	150	12	R_TYPE	High temperature alarm
Low temperature alarm	0	0	1	-	D	151	13	R_TYPE	Low temperature alarm
Delayed external alarm	0	0	1	-	D	152	14	R_TYPE	Delayed external alarm
Immediate external alarm with manual reset	0	0	1	-	D	153	15	R_TYPE	Immediate external alarm with manual reset
RTC fault alarm	0	0	1	-	D	154	16	R_TYPE	RTC fault alarm
EEPROM unit parameters alarm	0	0	1	-	D	155	17	R_TYPE	EEPROM unit parameters alarm
EEPROM operating parameters alarm	0	0	1	-	D	156	18	R_TYPE	EEPROM operating parameters alarm
Maximum time in calculation of PID parameters	0	0	1	-	D	157	19	R_TYPE	Maximum time in calculation of PID parameters
PID gain null	0	0	1	-	D	158	20	R_TYPE	PID gain null
PID gain negative	0	0	1	-	D	159	21	R_TYPE	PID gain negative
Integral & derivative time negative	0	0	1	-	D	160	22	R_TYPE	Integral & derivative time negative
Maximum time in calculation of continuous gain	0	0	1	-	D	161	23	R_TYPE	Maximum time in calculation of continuous gain
Starting situation not suitable	0	0	1	-	D	162	24	R_TYPE	Starting situation not suitable
Switch controller On/Off	0	0	1	-	D	174	36	R_W_TYPE	Switch controller On/Off

(*) Functions active starting from software version higher than 1.0.

Type of variable : A =analogue, D=digital, I=integer

SVP= variable address with CAREL protocol on 485 serial card.

ModBus® : variable address with ModBus® protocol on 485 serial card.

The selection between CAREL and ModBus® protocol is automatic. For both of them the speed is fixed to 19200 bit/s.

All the devices connected to the same network must feature the same serial parameters: - 8 data bit;
- 1 start bit;
- 2 stop bit;
- no parity check;
- 19200 baud rate.

8. ALARMS

8.1 Types of alarms

There are two types of alarms available:
- high temperature (E04) and low temperature (E05);
- serious alarms, that is, all the others.

The data memory alarms E07/E08 always cause the control to shutdown. "Alarm" mode (c0=5) can use one or more outputs to signal a low or high temperature, probe disconnected or short-circuited alarm: see the chapter on "Functions". The effect of the outputs on the alarms in special operation depends on the "dependence" parameter: see the chapter on "Functions".

The controller also indicates alarms due to faults on the controller itself, on the probes or in the "Auto-Tuning" procedure. An alarm can also be activated via an external contact. The display shows "Exy" alternating with the standard display. At the same time, an icon flashes (spanner, triangle or clock) and the buzzer may be activated (see the table below). If more than one error occurs, these are shown in sequence on the display.

A maximum of 4 alarms are saved, in a FIFO list (AL0,AL1,AL2,AL3). The last alarm saved can be read from parameter AL0 (see the list of parameters).

Example: display after error E03

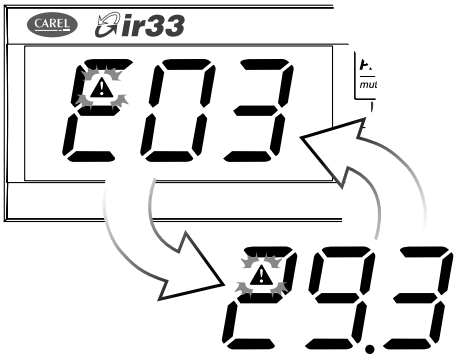

To mute the buzzer press Prg/mute.

8.2 Alarms with manual reset

- To cancel the signal of an alarm with manual reset, once the causes have ceased, press Prg/mute and UP for 5 seconds.

8.3 Display alarm queue

- Access the list of Parameters, as described in paragraph 3.3.3.
- Press ▲ / ▼ until reaching parameter "AL0" (last error saved).
- Press **Set**, this accesses a submenu where the ▲ and ▼ buttons can be used to scroll between the year, month, day, hours, minutes and type of alarm activated. If the controller is not fitted with the RTC, only the type is saved.
- From any of the parameters, pressing **Set** returns to the parent parameter "ALx".

Example:

'y07' -> 'M06' -> 'd13' -> 'h17' -> 'm29' -> 'E03'

indicates that alarm 'E03'(alarm from digital input) occurred on 13 June 2007 at 17:29.

8.4 Table of alarms

Message on display	Cause of the alarm	Icon on display	Alarm relay	Buzzer	Reset	Code shown in alarm queue ALx_TYPE	Control action	Checks/solutions
E01	Probe B1 fault	flashing	The alarm relay is activated according to the operating mode and/or the dependence	OFF	automatic	E01	Depends on parameter c10	Check probe connections
E02	Probe B2 fault	flashing		OFF	automatic	E02	If c19=1 & c0=1/2, as for E01, otherwise control does not stop.	Check probe connections
E03	Digital contact open (immediate alarm)	flashing		ON	automatic	E03	Based on parameter c31	Check parameters c29,c30,c31. Check the external contact.
E04	The temperature measured by the probe has exceeded the threshold P26 for a time greater than P28.	flashing		ON	automatic	E04	No effect on control	Check parameters P26,P27, P28,P29
E05	The temperature measured by the probe has fallen below threshold P25 for a time greater than P28.	flashing		ON	automatic	E05	No effect on control	Check parameters P25,P27, P28,P29
E03	Digital contact open (delayed alarm)	flashing		ON	manual	E03	Based on parameter c31	Check parameters c29,c30, c31,P28. Check the external contact.
E03	Digital contact open (immediate alarm with manual reset)	flashing		ON	manual	E03	Based on parameter c31	Check parameters c29,c30,c31. Check the external contact.
E06	Real time clock fault	flashing		OFF	automatic /manual	-	-	Reset the clock time. If the alarm persists, contact service.
E07	EEPROM error, unit parameters	flashing		OFF	automatic	-	Total shutdown	Contact service
E08	EEPROM error, operating parameters	flashing		OFF	automatic	-	Total shutdown	Reset default values using the procedure described. If the alarm persists, contact service.
E09	Acquisition error. Reached max. time in calculation of PID parameters.	flashing		ON	manual	-	Auto-Tuning stopped	Reset the alarm manually or switch the controller off and on again
E10	Calculation error: PID gain null.	flashing		ON	manual	-	Auto-Tuning stopped	
E11	Calculation error: PID gain negative	flashing		ON	manual	-	Auto-Tuning stopped	
E12	Calculation error: Integral & deriv. time negative	flashing		ON	manual	-	Auto-Tuning stopped	
E13	Acquisition error. Reached max. continuous time in calculation of gain.	flashing		ON	manual	-	Auto-Tuning stopped	
E14	Error when starting. Situation not suitable	flashing		ON	manual	-	Auto-Tuning stopped	

The alarms that occur during the Auto-Tuning procedure are not put in the alarm queue.

8.5 Alarm parameters

The following parameters determine the behaviour of the outputs when an alarm is active.

8.5.1 Status of the control outputs with probe alarm (parameter c10)

This determines the action on the control outputs when there is a control probe alarm E01, which may be one of the four responses envisaged. When OFF is selected, the controller shuts down immediately and the timers are ignored. When ON is selected, on the other hand, the "Delay between activations of two different relay outputs" (parameter c6) is observed. When alarm E01 is resolved, the controller restarts normally and the alarm output, if set, terminates the signal (see mode 5). On the other hand, both the signal on display and the buzzer remain active until Prg/mute is pressed.

Par	Description	Def	Min	Max	UoM
c10	Status of the control outputs with probe alarm 0=All outputs OFF 1= All outputs ON 2="Direct" outputs on, "reverse" off 3="Reverse" outputs on, "direct" off	0	0	3	-

8.5.2 Alarm parameters and activation

P25 (P26) is used to determine the activation threshold for the low (high) temperature alarm E05 (E04). The value set for P25 (P26) is continuously compared against the value measured by probe B1. Parameter P28 represents the "alarm activation delay", in minutes; the low temperature alarm (E05) is activated only if the temperature remains below the value of P25 for a time greater than P28. The alarm may relative or absolute, depending on the value of parameter P29. In the former case (P29=0), the value of P25 indicates the deviation from the set point and thus the activation point for the low temperature alarm is: set point - P25. If the set point changes, the activation point also changes automatically. In the latter case (P29=1), the value of P25 indicates the low temperature alarm threshold. The low temperature alarm active is signalled by the buzzer and code E05 on the display. The same applies to the high temperature alarm (E04), with P26 instead of P25.

Par	Description	Def	Min	Max	UoM
P25	Low temperature alarm threshold if P29=0, P25=0: threshold disabled if P29=1, P25=-50: threshold disabled	-50	-50	P26	°C/°F
P26	High temperature alarm threshold if P29=0, P26=0: threshold disabled if P29=1, P26=150: threshold disabled	150	P25	150	°C/°F
P27	Alarm differential	2	0	50	°C/°F
P28	Alarm delay time	120	0	250	min
P29	Type of alarm threshold 0=relative 1=absolute	1	0	1	-

Alarms E04 and E05 have automatic reset. P27 represents the hysteresis between the alarm activation value and deactivation value.
If Prg/mute is pressed when the value measured is above one of the thresholds, the buzzer is immediately muted, while the alarm code and the alarm output, if set, remain active until the value measured is outside of the activation threshold.

P28 sets the minimum time required to generate a high/low temperature alarm (E04/E05) or delayed alarm from external contact (E03). To generate an alarm, the value measured by probe B1 must remain below the value of P25 or above the value of P26 for a time greater than P28. For an alarm from digital input (c29, c30=3), the contact must remain open for a time greater than P28. In the case of an alarm event, a counter starts and generates an alarm when reaching the minimum time P28. If during the count the value measured returns within the threshold or the contact closes, the alarm is not signalled and the count is reset. When a new alarm condition occurs, the count starts from 0 again.

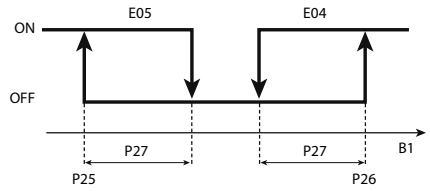

Key	
E04	High temperature alarm
E05	Low temperature alarm
B1	Probe 1

8.5.3 Status of the control outputs with alarm from digital input (parameter c31)

Parameter c31 determines the action on the control outputs if an alarm from digital input E03 is active (see c29 and c30). When OFF is selected, the controller shuts down immediately and the timers are ignored. When ON is selected, on the other hand, the "Delay between activations of two different relay outputs" (parameter c6) is observed. If the alarm from digital input has automatic reset (c29=1 and/or c30=1), when normal conditions return (external contact closed), the alarm output, if set (see c0=5) is reset and normal control resumes.

c31=0 all control outputs OFF
c31=1 all control outputs ON
c31=2 only the outputs with "reverse" operation OFF, the others are not affected
c31=3 only the outputs with "direct" operation OFF, the others are not affected.

Par.	Description	Def	Min	Max	UoM
c31	Status of control outputs with alarm from digital input 0= All outputs OFF 1= All outputs ON 2="Reverse" outputs OFF, others unchanged 3="Direct" outputs OFF, others unchanged	0	0	3	-

9. TECHNICAL SPECIFICATIONS AND PRODUCT CODES

9.1 Technical specifications

	Model	Voltage	Power
Power supply	IR33x(V,W,Z,D,A,B,E)7Hx(B,R)20	115/230Vac(-15% to +10%), 50/60Hz	6VA, 50mA~ max
	DN33x(V,W,Z,A,B,E)7Hx(B,R)20		
	IR33x(V,W,Z,D,A,B,E)7LR20, DN33x(V,W,Z,A,B,E)7LR20	12/24Vac(-10% to +10%), 50/60Hz	4VA, 300mA~ max
		12/30Vdc	300 mA ⎓ max
		Only use SELV power supply	

Insulation guaranteed by the power supply	IR33x(V,W,Z,D,A,B,E)7Hx(B,R)20 DN33x(V,W,Z,A,B,E)7Hx(B,R)20	insulation from very low voltage parts	reinforced
			6 mm in air, 8 mm on surface
			3750V insulation
		insulation from relay outputs	basic
			3 mm in air, 4 mm on surface
			1250V insulation
	IR33x(V,W,Z,D,A,B,E)7LR20 DN33x(V,W,Z,A,B,E)7LR20	insulation from very low voltage parts	to be guaranteed externally by safety transformer
		insulation from relay outputs	reinforced
			6 mm in air, 8 mm on surface
			3750V insulation

Inputs	B1 (PROBE1)	NTC or NTC extended range or PTC or PT1000
	B2 (PROBE2)	
	DI1	voltage-free contact, contact resistance < 10Ω, closing current 6mA
	DI2	
	Maximum distance of probes and digital inputs less than 10m	
	Note: in the installation, keep the power and load connections separate from the probe, digital inputs, repeater display and supervisor cables.	

Type of probe	Std. CAREL NTC	10kΩ at 25°C, range from –50T90°C	
		measurement error:	1°C in range from –50T50°C
			3°C in range from +50T90°C
	High temperature NTC	50kΩ at 25°C, range from –40T150°C	
		measurement error:	1.5°C in range from –20T115°C
			4°C in range outside of -20T115°C
	PTC	985Ω at 25°C, range from -50T150°C	
		measurement error	2°C in range from –50T50°C
			4°C in range from +50T150°C
Type of probe	PT1000	1097Ω at 25°C, range from -50T150°C	
		measurement error:	3°C in range from –50T0°C
			5°C in range from 0T150°C

Relay outputs		EN60730-1			UL 873	
	models	relays	250V~	oper. cycles	250V~	oper. cycles
	IR33x(V,W,Z,B,E)7LR20 DN33x(V,W,Z,B,E)7LR20 IR33x(V,W,Z,B,E)7Hx(R,B)20 DN33x(V,W,Z,B,E)7Hx(R,B)20	R1,R2	8 (4)A N.O.	100000	8A res 2FLA 12LRA C300	30000
		R3,R4	6 (4)A N.C.			

SSR outputs	models		
	IR33x(D,A)7LR20	D = 1 SSR output	Max. output voltage: 12 Vdc
	DN33x(D,A)7LR20		Output resistance: 600 Ω
	IR33x(D,A)7Hx(R,B)20 DN33x(D,A)7Hx(R,B)20	A = 4 SSR output	Max. output current: 20 mA
0 to 10 Vdc outputs	models		
	IR33B7LR20 DN33B7LR20	B = 1 relay + 1 x 0 to 10Vdc	Typical ramp time (10%-90%): 1 s
			Max output ripple: 50 mV
	IR33E7Hx(R,B)20 DN33E7Hx(R,B)20	E = 2 relays + 2 x 0 to 10Vdc	Max output current: 5 mA

Insulation guaranteed by the outputs	insulation from very low voltage parts/insulation between relay outputs & 0 to 10Vdc outputs		reinforced
			6 mm in air, 8 mm on surface
			3750V insulation
	insulation between outputs		basic
			3 mm in air, 4 mm on surface
			1250V insulation

IR receiver	On all models	
Clock with backup battery	IR33x(V,W,Z,D,A,B,E)7HB20, DN33x(V,W,Z,A,B,E)7HB20	
Buzzer	available on all models	
Clock	error at 25°C	± 10ppm (±5.3min/year)
	Error in range -10T60°C	-50ppm(±27 min/year)
	Ageing	< ±5ppm (±2.7min/year)
	Discharge time	6 months typical (8 months maximum)
	Recharge time	5 hours typical (< 8 hours maximum)

Operating temperature	IR33xxxxxx: -10T60 °C DN33x(V,W,Z,D,A,B,E)7LR20: -10T55°C DN33x(V,W,Z,D,A,B,E)7Hx(R,B)20: -10T50°C
Operating humidity	<90% rH non-condensing
Storage temperature	-20T70 °C
Storage humidity	<90% rH non-condensing
Front panel index of protection	IR33: assembly on smooth and indeformable panel with IP65 gasket
	DN33: front panel IP40, complete controller IP20
Construction of control device	Integrated electronic control device
Environmental pollution	2 normal
PTI of the insulating materials	Printed circuits 250, plastic and insulating materials 175
Period of stress across the insulating parts	Long
Class of protection against voltage surges	Category 2
Type of action and disconnection	1B relay contacts (microswitching)
Classification according to protection against electric shock	Class 2 when appropriately integrated
Device designed to be hand-held or integrated in hand-held devices	No
Software class and structure	Class A
Front panel cleaning	Only use neutral detergents and water
Carel serial network interface	External, available on all models
Programming key	Available on all models

	Type of connection				Size	Max current
Connections	model	relays/ SSR	power supply	probes		
	IR33x(V,W,Z,D,A,B,E)7x(H,L)x(R,B)20 DN33x(V,W,Z,A,B,E)7x(H,L)x(R,B)20	plug-in	plug-in	plug-in	for cables from 0.5 to 2.5 mm^2	12A
	Correct sizing of the power and connection cables between the controller and the loads is the responsibility of the installer.					
	In the max load and max operating temp. conditions, the cables used must be suitable for operation up to 105°C.					

Case	plastic	IR33x(V,W,Z,D,A,B,E)7x(H,L)x(R,B)20 DN33x(V,W,Z,A,B,E)7x(H,L)x(R,B)20	dimensions	IR33:34.4x76.2x79mm DN33:111x70x60
			mounting depth	IR33: 70.5mm DN33: 60mm

Assembly	IR33: on smooth and indeformable panel DN33 :DIN rail	IR33 :side fastening brackets, to be pressed in fully
	drilling template	IR33:dimensions 28.8±0.2 x 70.8±0.2mm
		DN33(display):dimensions 28.8±0.2 x 70.8±0.2mm
Display	digits	3 digit LED
	display	from –99 to 999
	operating status	indicated with graphic icons on the display
Keypad	4 silicone rubber buttons	

9.2 Cleaning the controller

When cleaning the controller do not use ethanol, hydrocarbons (petrol), ammonia and by-products. Use neutral detergents and water.

9.3 Product codes

CODE		Description
Flush mount	DIN rail mounting	
IR33V7HR20	DN33V7HR20	2 NTC/PTC,PT1000 input, 1 relay, buzzer, IR receiver, 115/230V
IR33V7HB20	DN33V7HB20	2 NTC/PTC,PT1000 input, 1 relay , buzzer, IR receiver, RTC, 115/230V
IR33V7LR20	DN33V7LR20	2 NTC/PTC,PT1000 input, 1 relay , buzzer, IR receiver, 12/24V
IR33W7HR20	DN33W7HR20	2 NTC/PTC,PT1000 input, 2 relays, buzzer, IR receiver, 115/230V
IR33W7HB20	DN33W7HB20	2 NTC/PTC,PT1000 input, 2 relays, buzzer , IR receiver, RTC, 115/230V
IR33W7LR20	DN33W7LR20	2 NTC/PTC,PT1000 input, 2 relays, buzzer, IR receiver, 12/24V
IR33Z7HR20	DN33Z7HR20	2 NTC/PTC,PT1000 input, 4 relays, buzzer, IR receiver, 115/230V
IR33Z7HB20	DN33Z7HB20	2 NTC/PTC,PT1000 input, 4 relays , buzzer, IR receiver, RTC, 115/230V
IR33Z7LR20	DN33Z7LR20	2 NTC/PTC,PT1000 input, 4 relays , buzzer, IR receiver, 12/24V
IR33A7HR20	DN33A7HR20	2 NTC/PTC,PT1000, 4 SSR, buzzer, IR receiver, 115/230V
IR33A7HB20	DN33A7HB20	2 NTC/PTC,PT1000 input, 4 SSR, BUZZER, IR receiver, RTC, 115/230V
IR33A7LR20	DN33A7LR20	2 NTC/PTC,PT1000 input, 4 SSR, buzzer, IR receiver, 12/24V
IR33D7HR20	-	2 NTC/PTC,PT1000 input, 1 SSR, buzzer, IR receiver, 115/230V
IR33D7HB20	-	2 NTC/PTC,PT1000 input, 1 SSR, buzzer, IR receiver, RTC, 115/230V
IR33D7LR20	-	2 NTC/PTC,PT1000 input, 1 SSR, buzzer, IR receiver, 12/24V
IR33B7HR20	DN33B7HR20	2 NTC/PTC,PT1000 input, 1 relay + 1 AO, buzzer, IR receiver, 115/230V
IR33B7HB20	DN33B7HB20	2 NTC/PTC,PT1000 input, 1 relay + 1 AO, buzzer, IR receiver, RTC, 115/230V
IR33B7LR20	DN33B7LR20	2 NTC/PTC,PT1000 input, 1 relay + 1 AO, buzzer, IR receiver, 12/24V
IR33E7HR20	DN33E7HR20	2 NTC/PTC,PT1000 input, 2 relays + 2 AO, buzzer, IR receiver, 115/230V
IR33E7HB20	DN33E7HB20	2 NTC/PTC,PT1000 input, 2 relays + 2 AO, buzzer, IR receiver, RTC, 115/230V
IR33E7LR20	DN33E7LR20	2 NTC/PTC,PT1000 input, 2 relays + 2 AO, buzzer, IR receiver, 12/24V
IROPZKEY00		Programming key
IROPZKEYA0		Programming key with power supply
IROPZ48500		RS485 serial interface
IROPZ485S0		RS485 serial interface with automatic recognition of TxRx+ & TxRx-
	IROPZSER30	RS485 serial card for DN33
CONV0/10A0		Analogue output module
CONV0NOFF0		ON/OFF output module
IRTRUES000		Remote control

9.4 Software revisions

REVISION	Description	
1.0	Functions active starting from software version higher than 1.0	
	FUNCTION	Parameter
	Soft start	c57
	0 to 10 V outputs	c19=5,6 / c66, c67
		d36, d40, d44, d48
		d37, d41, d45, d49

Headquarters

CAREL S.p.A.
Via dell'Industria, 11 - 35020 Brugine - Padova (Italy)
Tel. (+39) 0499 716611 - Fax (+39) 0499 716600
carel@carel.com - www.carel.com

Subsidiaries:

CAREL Asia Ltd
Rm. 11, 8/F., Shatin Galleria,
18 Shan Mei St., Fotan, Shatin - Hong Kong
Tel. (+852) 2693 6223 - Fax: (+852) 2693 6199
e-mail: sales@carel-asia.com - www.carelhk.com

CAREL Australia Pty Ltd
PO Box 6809, Silverwater B.C. N.S.W. 1811
Unit 37, 11-21 Underwood Rd Homebush N.S.W. 2140
Tel: (+612) 8762 9200 - Fax: (+612) 9764 6933
e-mail: sales@carel.com.au - www.carel.com.au

CAREL China - CAREL Electronic (Suzhou) Co. Ltd.
No. 26, 369 Lushan Road,
Suzhou City, Jiangsu Province,
215129 P.R. of China
Tel: (+865) 12 66628098 - Fax: (+865) 12 66626631
e-mail: sales@carel-china.com - www.carel-china.com

CAREL Deutschland GmbH
Am Spielacker, 34, 63571 Gelnhausen (Germany)
Tel. (+49) 6051 96290 - Fax (+49) 6051 962924
e-mail: info@carel.de – www.carel.de

CAREL France Sas
32, rue du Champ Dolin - 69800 Saint Priest, France
Tel. (+33) 472 47 88 88 - Fax (+33) 478 90 08 08
e-mail: carelfrance@carelfrance.fr – www.carelfrance.fr

CAREL Ibérica
Automatización y control ATROL S.L.
Comte Borrell, 15 - 08015 Barcelona
Tel. (+34) 933 298 700 - Fax. (+34) 933 298 700

DELEGACIÓN CENTRO
Edificio Burgosol C/Comunidad de Madrid, 35 bis, Oficina 47
28230 Las Rozas - MADRID
tel.(+34) 91 637 59 66 - Fax: (+34) 91 637 32 07
e-mail: atrol@atrol.es - www.carel.es

CAREL Sud America Ltda
Avenida Dourado, 587 - Cep. 13.280-000 Vinhedo – São Paulo (Brasil)
Tel (+55) 19 38 26 25 65 - Fax (+55) 19 38 26 25 54
e-mail: carelsudamerica@carel.com.br – www.carel.com.br

CAREL U.K. Ltd
Unit 6, Windsor Park Industrial Estate, 50 Windsor Avenue
Merton SW19 2TJ, London (United Kingdom)
Tel. (+44) 208 545 9580 - Fax (+44) 208 543 8018
e-mail: careluk@careluk.co.uk – www.careluk.co.uk

CAREL U.S.A. L.L.C
385 South Oak Street
Manheim, PA 17545, Pennsylvania (USA)
Tel. (+1) 717-664-0500 - Fax (+1) 717-664-0449
e-mail: sales@carelusa.com - www.carelusa.com

All trademarks hereby referenced are
the property of their respective owners.
CAREL is a registered trademark of
CAREL S.p.A. in Italy and/or other countries.

© CAREL S.p.A. 2008 all rights reserved

CAREL reserves the right to modify the features of its products
without prior notice.

www.carel.com

Affiliates:

CAREL Korea Co. Ltd.
A-901,Chung Ang Circ. Complex
1258 Kuro Bon-Dong, Kuro-KU,
Seoul-KOREA
Tel: (+82) 02 2068 8001
Fax: (+82) 02 2068 8005
e-mail: info@carel.co.kr - www.carel.co.kr

CAREL Ireland
FarrahVale Controls & Electronics Ltd
28E Ashbourne Business Centre
County Meath – IRELAND
Tel: (+353) 1 8353745
Fax: (+353) 1 8353681
www.carel.com - info@carel.ie

CAREL Spol (Czech and Slovakia) s.r.o.
Prazska 298
250 01 Brandys nad Labem, Czech Republic.
Tel: (+420) 326 377 729
Fax: (+420) 326 377 730
e-mail: carel@carel-cz.cz - www.carel-cz.cz

CAREL Thailand Co., Ltd.
444 4th Floor OlympiaThai Building, Ratchadapisek Road,
Samsennok, Huaykwang, Bangkok 10310 Thailand
Tel: (+66) 2 513 5610
Fax: (+66) 2 513 5611
e-mail: info@carel.co.th - www.carel.co.th

CAREL Turkey
CFM Sogutma ve Otomasyon San. Tic. LTD
1201 Sok. No: 13/Z 21
Izmir – TURKEY
Tel: (+90) 232 4590888
Fax: (+90) 232 4593435
www.cfmsogutma.com - info@cfmsogutma.com

CAREL reserves the right to modify or change its products without prior notice.

ir33 universale +030220801 - rel. 1.0 - 16.04.2008