# Compact cylinder, Series KPZ

**0822398007**



## AVENTICS Series KPZ Compact cylinders

The AVENTICS Series KPZ is a compact cylinders based on the widely used standard NFE 49 004. It offer a wide variety of variants and are suitable for a multitude of applications thanks to their sizing.





## Technical data

| | |
|---|---|
| Industry | Industrial |
| Standards | NFE 49004 |
| Piston Ø | 100 mm |
| Stroke | 50 mm |
| Ports | G 1/8 |
| Functional principle | Double-acting |
| Cushioning | Elastic cushioning |
| Magnetic piston | Piston with magnet |
| Environmental requirements | Industry standard<br>ATEX optional |
| Piston rod thread - type | Internal thread |
| Piston rod thread | M16 |
| Piston rod | single |
| Scraper | Standard Industry Scraper |
| Pressure for determining piston forces | 6,3 bar |
| Retracting piston force | 4639 N |
| Extracting piston force | 4948 N |
| Min. ambient temperature | -20 °C |
| Max. ambient temperature | 80 °C |
| Min. working pressure | 0.6 bar |

| | |
|---|---|
| Max. working pressure | 10 bar |
| Stroke max. | 500 mm |
| Medium | Compressed air |
| Min. medium temperature | -20 °C |
| Max. medium temperature | 80 °C |
| Max. particle size | 50 µm |
| Min. oil content of compressed air | 0 mg/m³ |
| Max. oil content of compressed air | 5 mg/m³ |

## Material

| | |
|---|---|
| Piston rod | Stainless Steel |
| Scraper material | Polyurethane |
| Seal material | Polyurethane |
| Material, front cover | Aluminum |
| Cylinder tube | Aluminum |
| End cover | Aluminum |
| Part No. | 0822398007 |

## Technical information

ATEX-certified cylinders with identification II 2G Ex h IIC T4 Gb / II 2D Ex h IIIC T135°C Db_X can be generated in the Internet configurator.

The operating temperature range for ATEX-certified cylinders is -20°C ... 60°C.

The material for heat-resistant scraper and seal variants (ambient temperature: -10 °C ... 120 °C) is fluorocaoutchouc.

Further options can be generated in the Internet configurator.

The pressure dew point must be at least 15 °C less than ambient and medium temperature and may not exceed 3 °C.

The oil content of compressed air must remain constant during the life cycle.

Use only the approved oils from AVENTICS. Further information can be found in the “Technical information” document (available in https://www.emerson.com/en-us/support).

## Dimensions

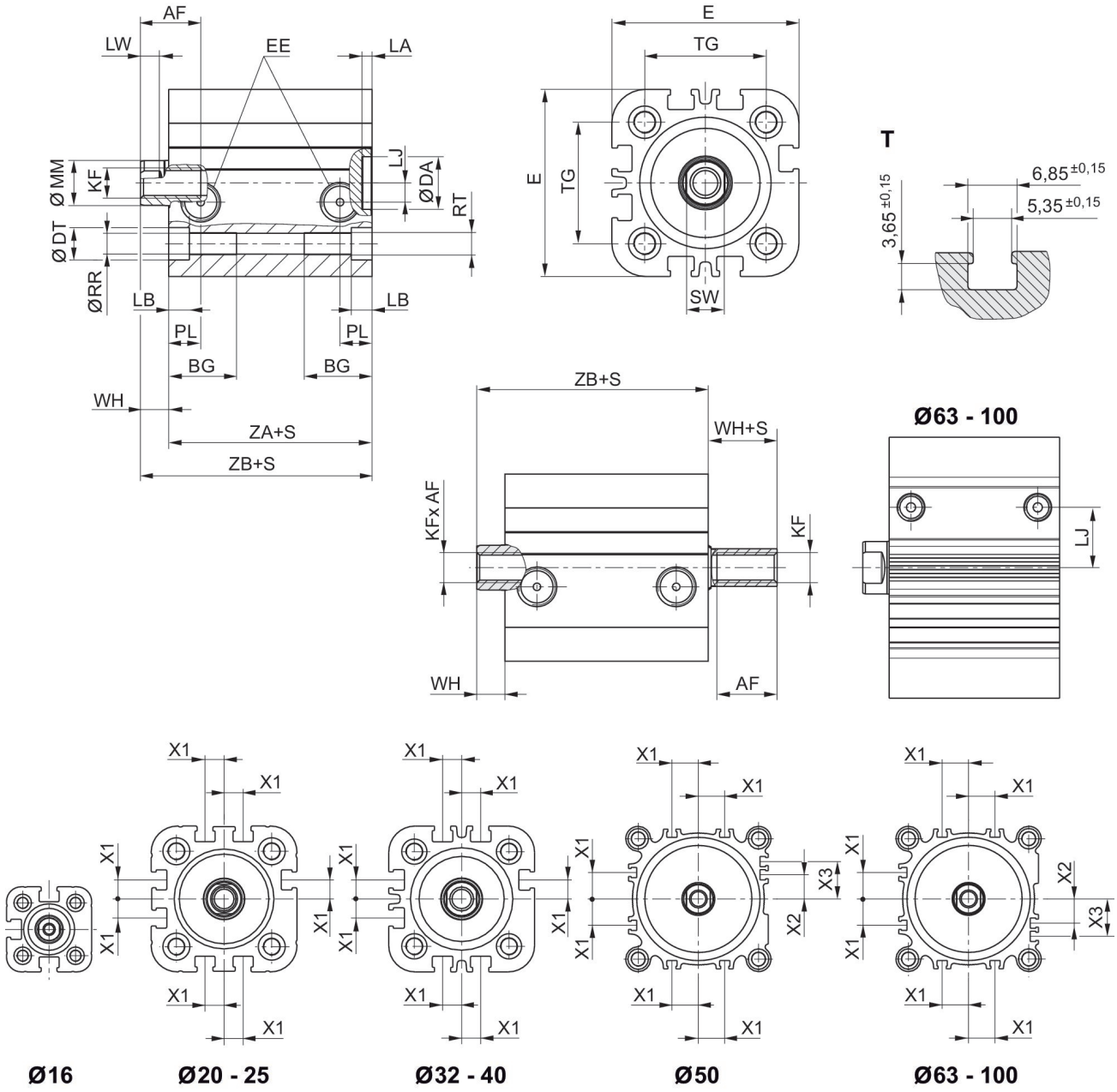


S = stroke
T = View for sensor groove

## Maximum admissible lateral force dynamic

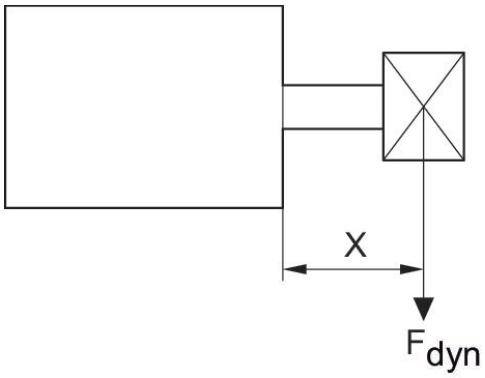


F dyn. = dynamic lateral force
X = distance between force application point and cylinder cover
S = stroke

## Maximum admissible lateral force dynamic

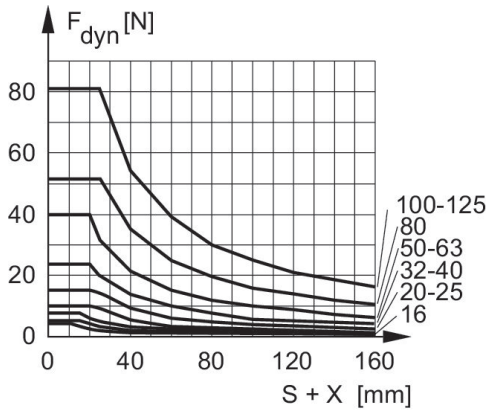


F dyn. = dynamic lateral force
X = distance between force application point and cylinder cover
S = stroke

## Maximum admissible lateral force static

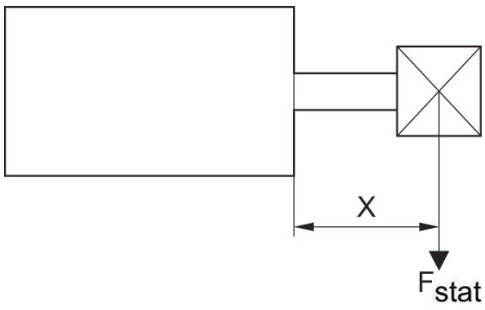


F stat. = static lateral force
X = distance between force application point and cylinder cover

## Maximum admissible lateral force static

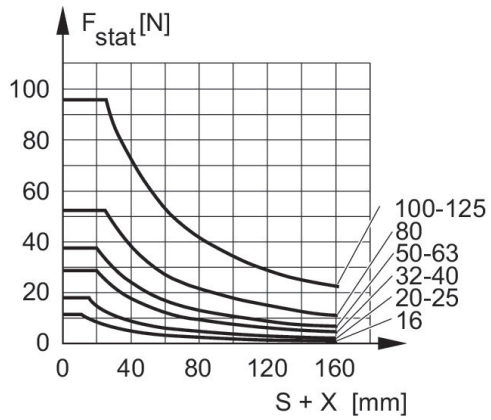


F stat. = static lateral force
X = distance between force application point and cylinder cover
S = stroke

## Overview drawing

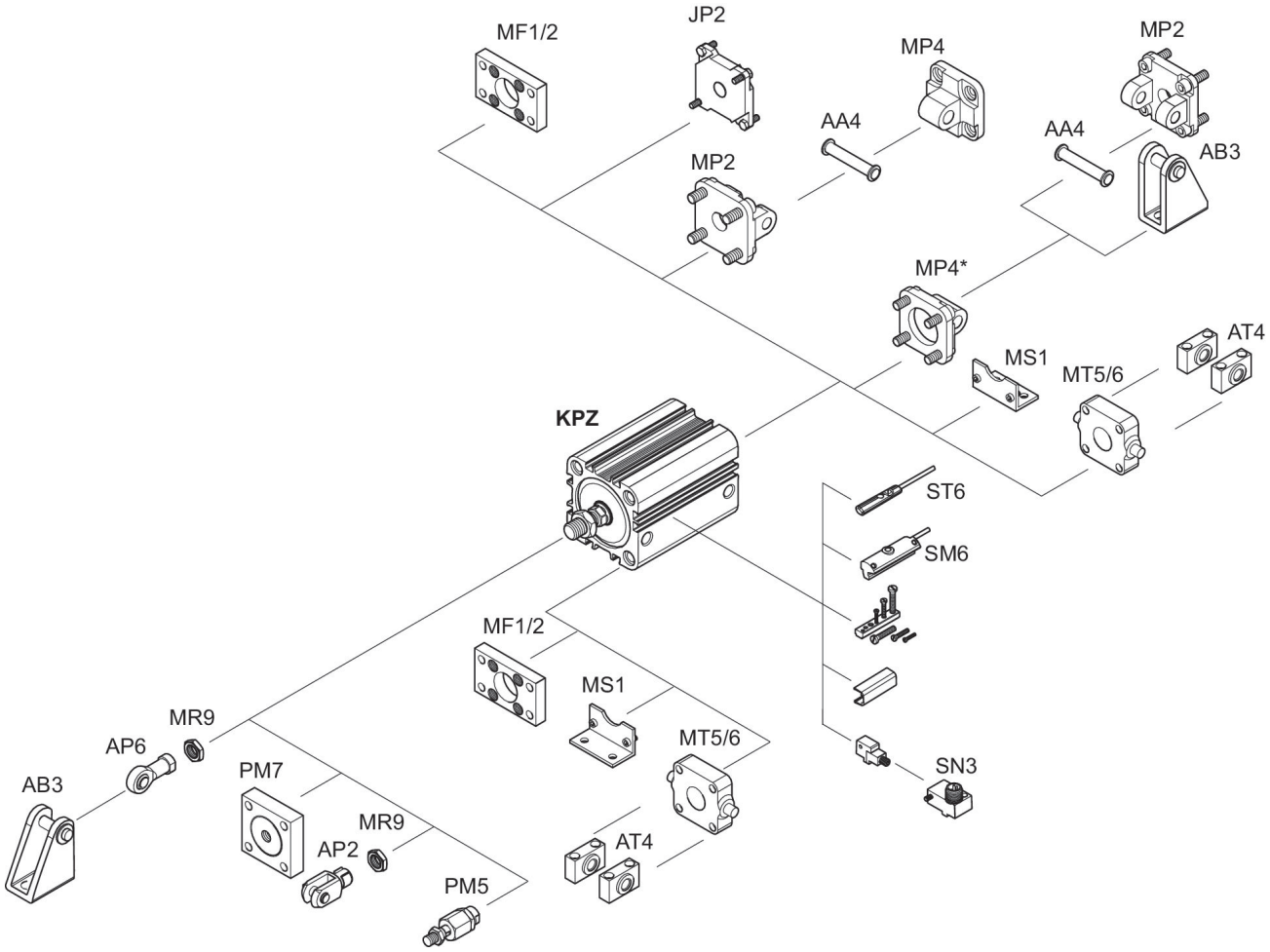


* Available for installation on KPZ for cylinder diameters 16 - 25 mm

NOTE: This overview drawing is only for orientation to indicate where the various accessory parts can be fastened to the cylinder. The illustration has been simplified for this purpose. It is thus not possible to derive the dimensions from this overview.

| Piston Ø | AF min. Option: through piston rod | BG min. | DA H11 | DT H13 | E | EE | KF | LA | LB |
|---|---|---|---|---|---|---|---|---|---|
| 16 | 10 | 14.5 | 10 | 6 | 29.5 | M5 | M4 | 2.5 | 3.5 |
| 20 | 12 10: S<3 mm 2) | 15.5 | 12 | 7.5 | 36 | M5 | M6 | 2.5 | 4.5 |
| 25 | 12 10: S<3 mm 2) | 15.5 | 12 | 8 | 40 | M5 | M6 | 2.5 | 4.4 |
| 32 | 12 | 18 | 14 | 8.6 | 50 | G 1/8 | M8 | 2.5 | 5.5 |
| 40 | 12 | 18 | 14 | 9 | 58 | G 1/8 | M8 | 2.5 | 5.5 |
| 50 | 16 12: S<4 mm 2) | 24 | 18 | 11 | 68 | G 1/8 | M10 | 2.5 | 2 |
| 63 | 16 12: S<4 mm 2) | 24 | 18 | 11 | 80 | G 1/8 | M10 | 2.5 | 2 |
| 80 | 20 15: S<5 mm 2) | 28 | 23 | 14 | 99 | G 1/8 | M12 | 3 | 1 |
| 100 | 26 21: S<5 mm 2) | 27.5 | 28 | 15 | 120 | G 1/8 | M16 | 3 | 3.5 |

| Piston Ø | LJ | LW | MM f8 | PL | Ø RR | RT | SW | TG | WH |
|---|---|---|---|---|---|---|---|---|---|
| 16 | 2.5 | 2.8 | 8 | 7.5 | 3.3 | M4 | 7 | 18 ±0,4 | 4.5 |
| 20 | 4.5 | 3.7 | 10 | 7.5 | 4.2 | M5 | 8 | 22 ±0,4 | 5 |
| 25 | 5 | 3.7 | 10 | 7.5 | 4.2 | M5 | 8 | 26 ±0,4 | 5.5 |
| 32 | 5.1 | 5 | 12 | 8.5 | 5.1 | M6 | 10 | 32 ±0,5 | 7 |
| 40 | 9.6 | 5 | 12 | 8.5 | 5.1 | M6 | 10 | 42 ±0,5 | 7 |
| 50 | 8.5 | 4.8 | 16 | 8.5 | 6.7 | M8 | 13 | 50 ±0,6 | 7.5 |
| 63 | 17.8 | 4.8 | 16 | 8.5 | 6.7 | M8 | 13 | 62 ±0,7 | 8 |
| 80 | 22.9 | 6.4 | 20 | 8.3 | 8.5 | M10 | 16 | 82 ±0,7 | 9.5 |
| 100 | 26.5 | 6.4 | 25 | 9.7 | 8.5 | M10 | 21 | 103 ±0,7 | 10.5 |

| Piston Ø | X1 | X2 | X3 | ZA + Stroke | ZB + Stroke |
|---|---|---|---|---|---|
| 16 | – | – | – | 38 | 42,5 0/+1,4 |
| 20 | 4.2 | – | – | 38 | 43 0/+1,4 |
| 25 | 4.5 | – | – | 39 | 44,5 0/+1,4 |
| 32 | 6.5 | – | – | 44 | 51 0/+1,6 |
| 40 | 11 | – | – | 45 | 52 0/+1,6 |
| 50 | 13 | 4 | 13 | 45.5 | 53 0/+1,6 |
| 63 | 18 | 12 | 21 | 49 | 57 0/+2 |
| 80 | 18 | 16.5 | 25.5 | 54.5 | 64 0/+2 |
| 100 | 20 | 20 | 29 | 66.5 | 77 0/+2 |