KH series

Power rocker switches with protection guard



DISTINCTIVE FEATURES

Protected against accidental actuation
Wide choice of colors
Laser etched or pad printed symbols
Illuminated or non-illuminated
Sealed to IP69K



ENVIRONMENTAL SPECIFICATIONS

- Front panel sealing : IP69K according to DIN 40050-9
- Salt spray resistance : 96 hours according to IEC 512-6, test 11f
- Vibration resistance : 10-500 Hz / 10 g per IEC 60068-2-6
- Operating temperature : -40 °C to +85 °C (-40 °F to +185 °F)

ELECTRICAL SPECIFICATIONS

- Currrent/voltage rating with resistive load :
  - Silver plated contacts (**A**) : 5 A 24 VDC, 100,000 cycles
    10 A 24 VDC, 10,000 cycles (terminals 6.35 x 0.8 only)
  - Gold plated contacts (**D**) : 20 mA 12 V, 150,000 cycles
- Current/voltage rating with lamp load - silver contacts (A) :
  - functions 6 : 100 W 24 VDC, 10,000 cycles
  - other functions : 60 W 24 VDC, 10,000 cycles
- Initial contact resistance : 10 mΩ max.
- Insulation resistance : 1,000 MΩ min. at 500 VDC
- Dielectric strength : 2,000 Vrms 50 Hz min. between terminals

GENERAL SPECIFICATIONS

- Mechanical life : 150,000 cycles min.
- Panel thickness : 0.8 mm to 4.6 mm
- Recommended panel thickness : between 2 mm and 3.5 mm

The company reserves the right to change specifications without notice.

KH series

Power rocker switches with protection guard

MATERIALS

- Case : PA 6-6
- Actuator : ABS
- Bezel : PA 6-6
- Contacts & terminals :
  brass, solid silver grain, silver plated (**A**)
  or brass, solid silver grain, gold plated (**D**)
- Contact roller : brass, nickel plated

APEM products may be recycled at end-of-life for the re-claiming of valuable metal components.

MATRIX MOUNTING

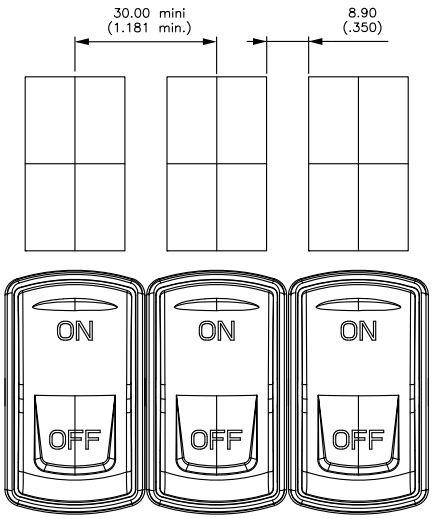

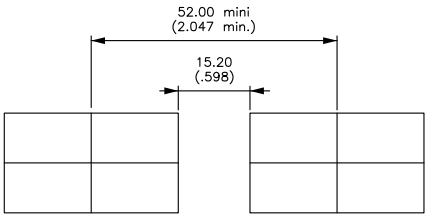

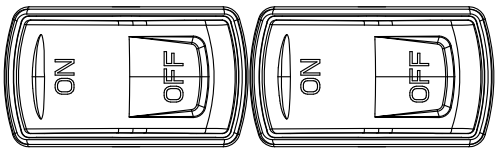

PANEL CUT-OUT

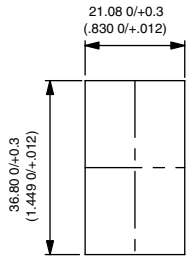

TERMINALS

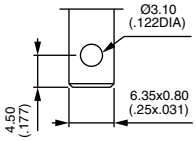

Solder lug / quick-connect

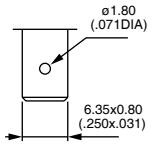

Normalized quick-connect 6.35x0.8

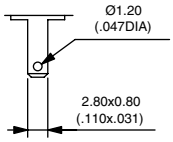

Normalized quick-connect 2.8x0.8

KH series

Power rocker switches with protection guard

ELECTRICAL FUNCTIONS AND CONNECTIONS

In the tables below, terminal connections as viewed from bottom of switch. Only the contact area is represented.
For single pole models, only terminals 1, 2 and 3 are to be considered (not terminals 6, 5, 4).

o = with terminal
▲ = momentary

2 POSITIONS

	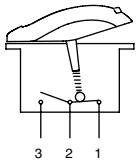	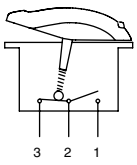
Function 5 KH35 - KH45		
Function 6 KH36-K46		

3 POSITIONS

	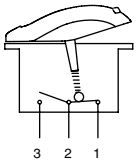	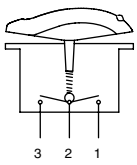	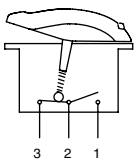
Function 7 KH37-KH47	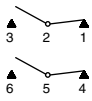	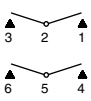	
Function 8 KH38-KH48			
Function 9 KH39-KH49			
Function 4 KH44			
Function 4-1R KH44-1R			

KH series

Power rocker switches with protection guard

BUILD YOUR PART NUMBER

CASE + LEDS

KH | ____ | ____ | ____ | ____ | ____ | ____ | Side A | Side B | ____

SERIES

KH

PROTECTION GUARDS

1	On 4 sides
2	On 2 sides

POLES

3	Single pole
4	Double pole

ELECTRICAL FUNCTIONS

4	ON	ON	ON
4-1R	ON	ON	MOM
5	MOM	-	ON
6	ON	-	ON
7	MOM	OFF	MOM
8	ON	OFF	MOM
9	ON	OFF	ON

CONTACTS

A	Silver
D	Gold plated

SEALING

Z	IP69K Standard

LEDS

X	None	F	LED 12 V yellow
A	LED 6 V red	N	LED 12 V blue
B	LED 6 V green	S	LED 12 V white
C	LED 6 V yellow	J	LED 24 V red
M	LED 6 V blue	K	LED 24 V green
R	LED 6 V white	L	LED 24 V yellow
D	LED 12 V red	P	LED 24 V blue
E	LED 12 V green	T	LED 24 V white

etc.

WIRING

See following pages.

TERMINALS

Solder lug/quick-connect

A	10 term. with barrier
B	10 term. w/o barrier
C	10 terminals for use with connector U2292 or U3152

Normalized quick-connect 6.35x0.8

D	10 term. with barrier
E	10 term. w/o barrier
F	10 term. for use with connector U2292 or U3152

Normalized quick-connect 2.8x0.8

G	10 term. with barrier
H	10 term. w/o barrier
J	10 terminals for use with connector U2282

ACTUATOR

____ | ____ | ____ | Area A | Area M | Area B

TYPE

1	For non-illuminated application
2	For illuminated application

COLOR

1	Blue	5	Yellow
1/4	Dark blue	6	Red
2	Black	7	Ivory
3	Green	9	Orange
4	Grey	A	Aluminum bright

MARKING ORIENTATION

N	North
O	West
S	South
E	East

Drawings on following pages.

SYMBOLS

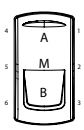

Symbols & Accessories : see end of the series.

NOTICE : please note that not all combinations of above numbers are available. Refer to the following pages for further information.

KH series

Power rocker switches with protection guard

PROTECTION GUARD ON 4 SIDES - KH1



Single pole	Double pole		2-3 5-6		1-2 4-5
	KH144*	ON	ON		ON
	KH144-1R*	ON	ON		MOM
KH135	KH145	MOM	-		ON
KH136	KH146	ON	-		ON
KH137	KH147	MOM	OFF		MOM
KH138	KH148	ON	OFF		MOM
KH139	KH149	ON	OFF		ON

*Function 4 : single pole in double pole case

→ FLAT SEAL

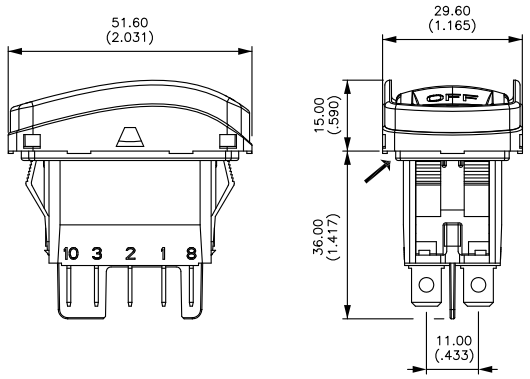

PROTECTION GUARD ON 2 SIDES - KH2



Single pole	Double pole		2-3 5-6		1-2 4-5
	KH244*	ON	ON		ON
	KH244-1R*	ON	ON		MOM
KH235	KH245	MOM	-		ON
KH236	KH246	ON	-		ON
KH237	KH247	MOM	OFF		MOM
KH238	KH248	ON	OFF		MOM
KH239	KH249	ON	OFF		ON

*Function 4 : single pole in double pole case

→ FLAT SEAL

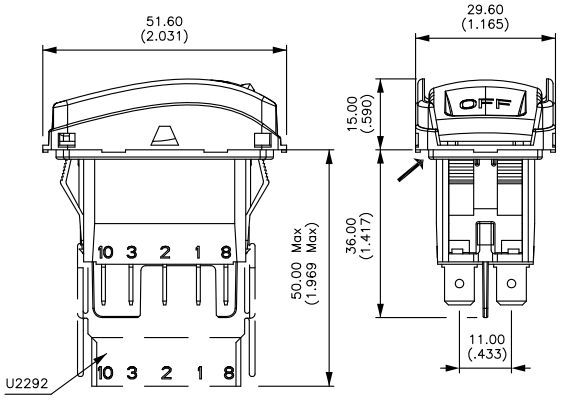

CASE + LEDS

TERMINALS

BASIC P/N ..... ACTUATOR

SOLDER LUG / QUICK-CONNECT

A	10 terminals with barrier
B	10 terminals w/o barrier
C	10 terminals for use with connector U2292 or U3152

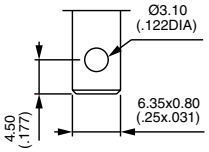

NORMALIZED QUICK-CONNECT 6.35X0.8

D	10 terminals with barrier
E	10 terminals w/o barrier
F	10 terminals for use with connector U2292 or U3152

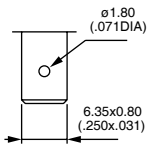

NORMALIZED QUICK-CONNECT 2.8X0.8

G	10 terminals with barrier
H	10 terminals w/o barrier
J	10 terminals for use with connector U2282

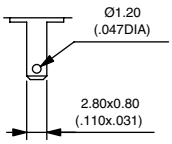

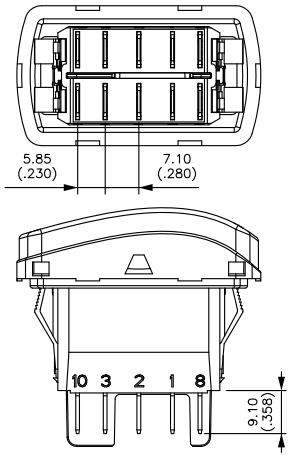

Terminals are marked on the case. The drawings show the maximum possible number of terminals.

KH series

Power rocker switches with protection guard

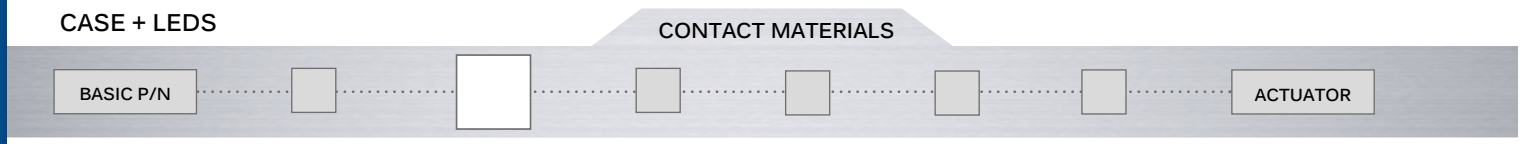

A Silver
D Silver, gold plated

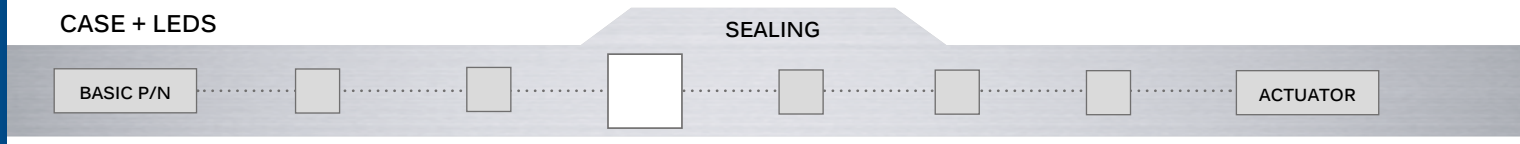

Z IP69K - standard

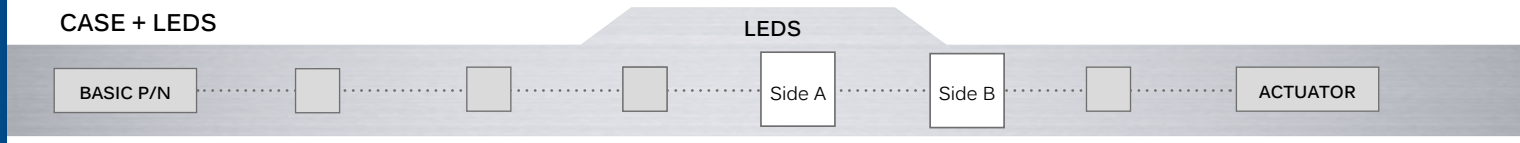

Complete each enlarged box with one of the codes listed below.

X Without LED

	Red	Green	Yellow	Blue	White	Amber	Red/green
6 VDC	**A**	**B**	**C**	**M**	**R**	**4**	**1**
12 VDC	**D**	**E**	**F**	**N**	**S**	**5**	**2**
24 VDC	**J**	**K**	**L**	**P**	**T**	**6**	**3**
No resistor	**U**	**V**	**W**	**Y**	**Z**	**9**	**8**

LED consumption : 20 mA @ nominal voltage (25 °C / 77 °F)
Other illumination solutions : on request.

For non-stabilized on-board power supplies submitted to potential voltage surges due to the alternator, 15 V and 30 V LED configurations are also available on request.
LED Tolerance ±10 %

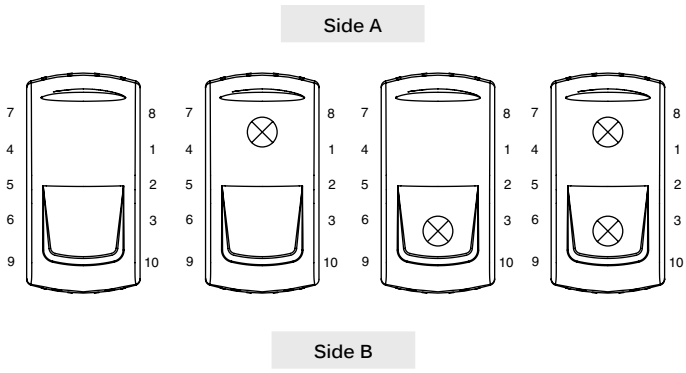

KH series

Power rocker switches with protection guard

CASE + LEDS — **WIRING**

BASIC P/N ····· ACTUATOR

The LED wiring diagram is shown on the case.

G Standard, to have independent LED.

H To obtain 2 symbol illumination levels (night illumination when OFF and higher illumination when ON).
- H wiring with LED on side A available with functions 6, 8, 9 and 44.
- H wiring with LED on side B available with functions 5, 6 and 9.
- H wiring with 2 LEDs available with functions 8 and 9.

More information (H wiring schematics) : on request.
Dotted line = external wiring, continuous line = internal wiring
Available in Single Pole only, with H and J quick-connect terminals.

I To have a polarity inversion (typical application : fan motor).
Dotted line = external wiring
Power supply betweeen 2 and 5 - Load between 1 and 4 or 3 and 6.
Available with H and J quick-connect terminals.

Please contact us for other wiring solutions.

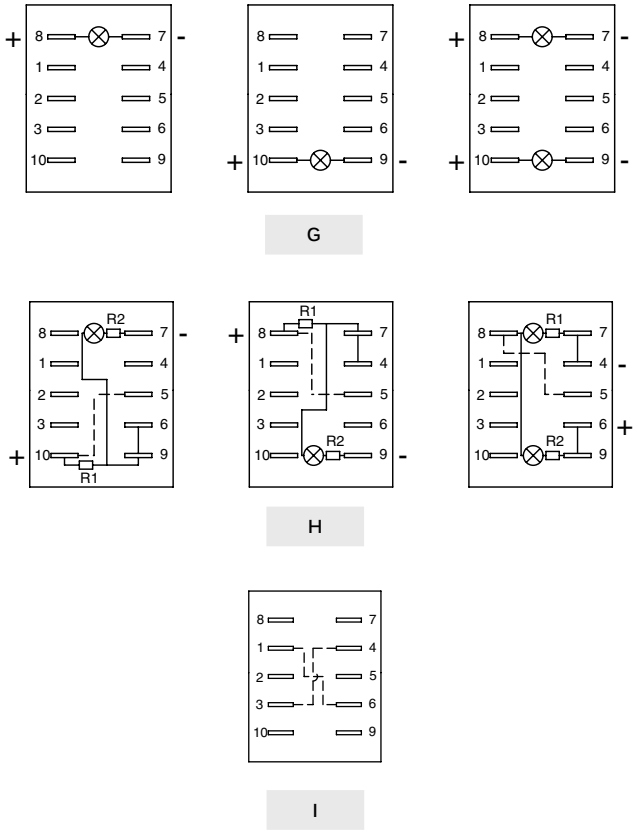

ACTUATOR — **ACTUATOR TYPE**

BASIC P/N ····· CASE + LEDS

1 For non-illuminated application
2 For illuminated application

Other rocker design : on request.



KH series

Power rocker switches with protection guard

ACTUATOR

ACTUATOR COLOR

BASIC P/N ····· CASE + LEDS ····· [ ] ····· [ ] ····· [ ] ····· [ ] ····· [ ]

1	Blue	6	Red
1/4	Dark blue	7	Ivory
2	Black	7/1	White
3	Green	9	Orange
4	Grey	A	Aluminum bright
5	Yellow		

Note : colors 7 and 7/1 not available on illuminated versions.
A **soft-touch varnish** can be added. Consult us.



ACTUATOR

MARKING ORIENTATION

BASIC P/N ····· CASE + LEDS ····· [ ] ····· [ ] ····· [ ] ····· [ ] ····· [ ]

If no marking required, complete the box with code **N**. Other orientations : on request.



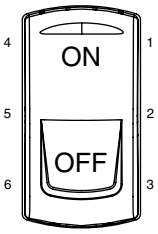

N

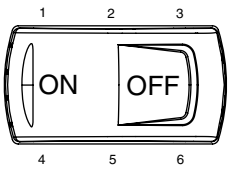

O

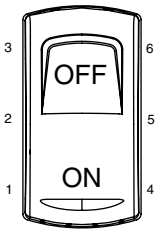

S

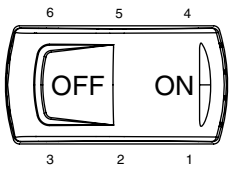

E

ACTUATOR

SYMBOLS

BASIC P/N ····· CASE + LEDS ····· [ ] ····· [ ] ····· [ ] ····· Area A ····· Area M ····· Area B

XX No symbol

Available symbols : Complete each enlarged box with the one of the codes listed on the following pages.

Marking color : White marking for illuminated rockers (laser etching) and non-illuminated black rockers (pad printing). Black marking for non-illuminated color rockers (pad printing).
Other : on request.

Laser etching resistance
- Water and petrol resistant acccording to EN 61058-1
- Tear resistant (cross-cut test) according to NF ISO 2409 : class 0
- UV resistant according to ISO 4892-2

MARKING AREA

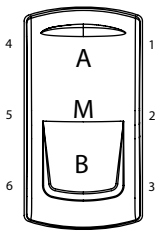

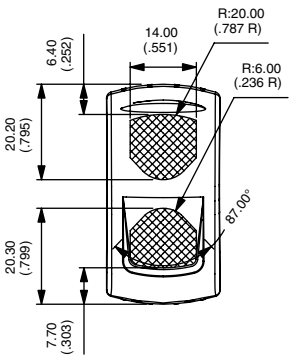

Marking area
For illuminated versions. The symbol will be included in the hatched area. Marking in M area : on request.

K range

Power rocker switches and indicators • symbols and accessories



Most symbols meet the ISO 7000 standard “graphical symbols for use on equipment” (code given in bracket in the description).

Contact us for symbols not featured in the following tables.

CODE	SYMBOL	DESCRIPTION
XX	None	-
01	ON	-
02	OFF	-
03	O	-
04	I	-
05	II	-
06	STOP	-
07	A	Stop
08	M	Motion
09		Up motion
10		Down motion
11		Hot
12		Cold
13		Hazard warning (0085)
14		Traveller lighting
15		Driver lighting (1421)

CODE	SYMBOL	DESCRIPTION
16		Revolving light
17		Rear ventilator
18		Heating (0637)
19		Door opening
20		Windshield demister/ defroster (0635)
21		Windshield wiper (0086)
22		Windshield washer (0088)
23		Ventilator fan (0089)
24		Side mirror defroster
25		Restarting pump
26		Front fog lights (0633)
27		Rear fog lights (0634)
28		Propulsion system trim
29		Beacon (1141)
30		Anchor
31		Electric motor (0011)

CODE	SYMBOL	DESCRIPTION
32		Emergency first aid vehicle (2565)
33		Load tipping (1557)
34		Loading light (2457)
35		Tractor, rear-ward (1667)
36		Combine, direction of movement (1678)
37		Use no forks (2406)
38		Transmission (1166)
39		Working spot light (1145)
40		Engine (0640)
41		Horn (0244)
42		Lock (1656)
43	TAXI	Taxi sign light (2551)
44		Working light (1204)
45		Working light symmetric (1204)
46		-
47	ASM	-

The company reserves the right to change specifications without notice.

K range

Power rocker switches and indicators • symbols and accessories

CODE	SYMBOL	DESCRIPTION
48		All wheel drive
49		Differential lock (1662)
50		-
51		-
52		-
53	N	-
54		Rear window wiper (0097)
55		Rear window washer (0099)
56		Lower load (2223)
57		Cab lock (1560)
58		Extraction
59		Pumping in
60		Rear PTO (1572)
61		Front PTO
62		Rockshaft down
63		Rockshaft up
64		Indicator
65		Brake release
66		Baggage room left door
67		Baggage room right door
68		Power blinds

CODE	SYMBOL	DESCRIPTION
69		Engine idle control
70	CRUISE RES/SET	Cruise res/set
71		Driver windows up/ down
72		Middle door opening
73		Front door opening
74		Lighting in baggage room
75	CRUISE ON/OFF	Cruise on/off
76	TV	TV
77		Pump
78	WC	Toilet
79	WC	Toilet decontamination
80		Front windshield heating
81	AUS	Aus
82		Radiator fan
83		Remove retarder
84		Restricted speed
85		Preheater
86		ABS detection
87		ECAS detection
88		Engine stop
89	CRUISE RES/CAN	Cruise res/cancel

CODE	SYMBOL	DESCRIPTION
90		ECAS reset
91		Driver windows heating
92	CRUISE SET+/SET-	Cruise set
93		Air bag up/down
94		Read lighting
95		Lighting main switch
96		Heating using water
97		Low beam
98		Position lights
99		Diesel acceleration
A1		Manual mode
A2		Clockwise cabin rotation
A3		Anticlockwise cabin rotation
A4		-
A5		-
A6		Parking brake
A7		-
A8		-
A9		-
AA		-
AB		-

K range

Power rocker switches and indicators • symbols and accessories

CODE	SYMBOL	DESCRIPTION
AC		-
AD		-
AE		-
AF		-
AG		Battery charging condition (0247)
AH		Turn signals (0084)
AJ		High beam (0082)
AK		Differential lock, bogie (2600)
AL		Brushing with a rotating brush (0070)
AM		Differential lock, transfer case 4x4 (2475)
AN		Loader bucket, float (1441)
AP		Loader bucket (1437)
AQ		Rear window washer & wiper (0098)
AR		Header, Header drive (1579)
AS		Excavator/backhoe boom side shift (2091)
AT		Chemical water treatment (1851)
AU		Grapple skidder, single funct° boom (1762)

CODE	SYMBOL	DESCRIPTION
AV		-
AW		-
AY		-
AZ		-
B1	HIGH	-
B2	LOW	-
B3		-

Legend scale

Depending on space available on the product (see “Symbols” section at the end of each series).

K range

Power rocker switches and indicators • symbols and accessories

MOUNTING PANELS

(NOT SUITABLE FOR USE WITH THE KH SERIES)

MOUNTING PANEL END



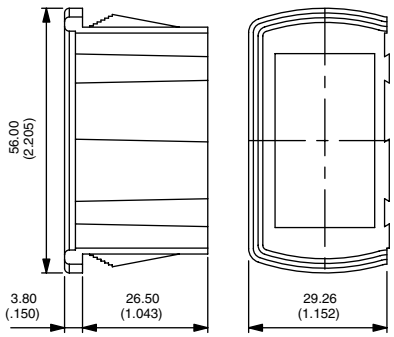

U2261

MOUNTING PANEL MIDDLE



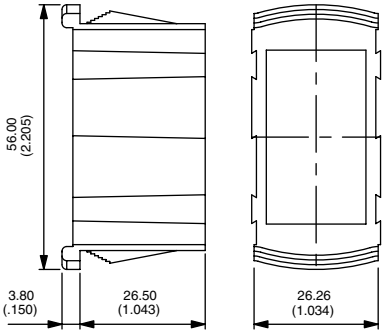

U2262

SINGLE MOUNTING PANEL



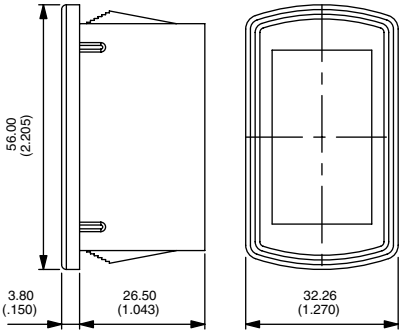

U2267

Recommended panel thickness : 1.10 mm - 1.80 mm - 2.60 mm - 3.40 mm - 4.20 mm - 5 mm - 5.80 mm

MOUNTING PANEL CUT-OUT

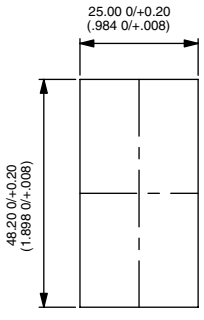

For 1 element U2267

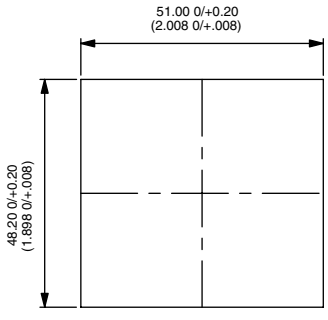

For 2 elements U2261

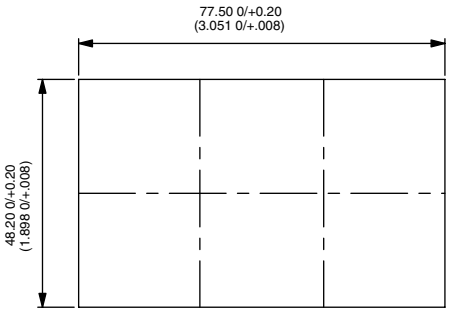

For 3 elements (2xU2261 + 1x U2262)

For additional elements, add 26.40 mm (1.039)

K range

Power rocker switches and indicators • symbols and accessories

22 X 44 ADAPTERS

(NOT SUITABLE FOR USE WITH THE KH SERIES)

FRONT PANEL DISMOUNTING

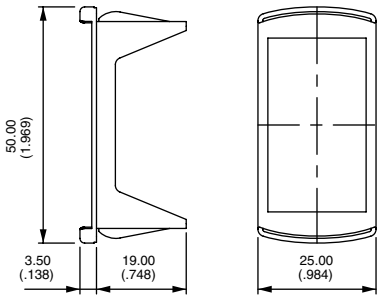

U3060

REAR PANEL DISMOUNTING

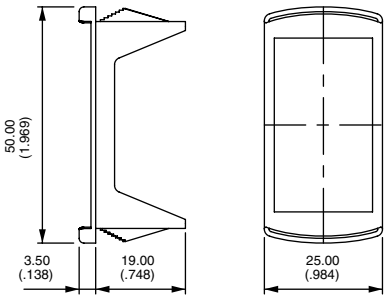

U3070

PANEL CUT-OUT

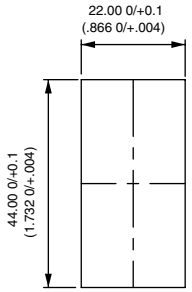

Recommended panel thickness
U3060 0.60 mm to 1.50 mm
U3070 1.60 mm -0.1/0 to 5.60 mm -0.1/0 in stages of 0.40 mm

Adapter colors (replace 0 with code)

1/4	Dark blue
2	Black
4	Grey
5	Yellow
6	Red
7/1	White

ACTUATOR REMOVING TOOL

(NOT SUITABLE FOR USE WITH KH1 MODELS - 4-SIDE PROTECTION GUARDS)

Extract actuator (KR only)
Allows the extraction of the rocker / rocker support assembly. Place the 2 claws under the support and push as indicated by the arrow.

Extract rocker (KR only)
Allows to separate the rocker from its support. Insert the tool between rocker and support as indicated by the arrrow. Pull out the tool in the opposite direction.

Extract switch (KR, KL and KI)
Allows to extract switch from panel mounting units. 2 Tools are necessary. Insert the tools between switch and panel mounting units from the rear to compress the snap-in device. Pull off switch manually.



U3052

to be ordered by pairs

BLANKING CAPS

Usefull for future extensions.
Connectors can be hanged on specific hole plugs. Contact APEM.

U2271	Blue	**U2275**	Yellow
U2271/4	Dark blue	**U2276**	Red
U2272	Black	**U2277**	Ivory
U2273	Green	**U2279**	Orange
U2274	Grey		



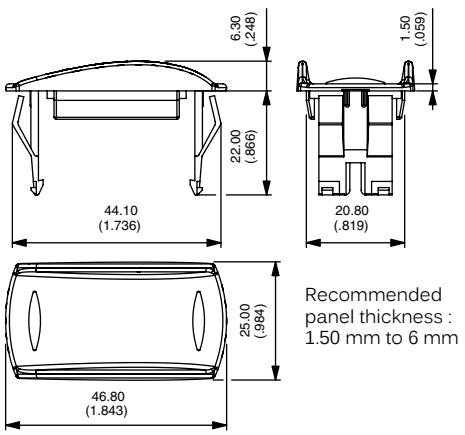

Recommended panel thickness : 1.50 mm to 6 mm

K range

Power rocker switches and indicators • symbols and accessories

CONNECTORS

Standard color : black. Other colors : on request. Connectors cannot be combined with wiring types H and I.

U2260 6 terminal version. For use with terminals type 2, 3, 4 or 5.
6.35 (1/4) tabs to be fitted by the user (example : TE42282-2).
Can be used for the KG series.

U2282 10 terminal version. For use with terminals type H or J.
2.8 (.110) tabs to be fitted by the user (example : AMP/Tyco 0-927779-3).

U2292 10 terminal version : For use with terminals type B, C, E or F.
6.35 (1/4) tabs to be fitted by the user (example : TE42282-2).

U3152 10 terminal version. For use with terminals type B, C, E or F.
6.35 (1/4) tabs to be fitted by the user (example : "Timer" terminals TE927833-2)

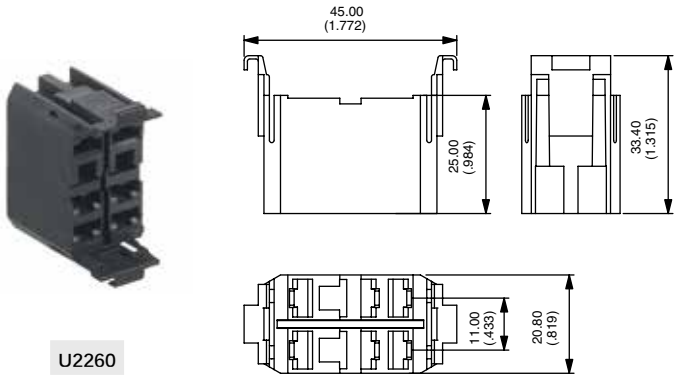

U2260

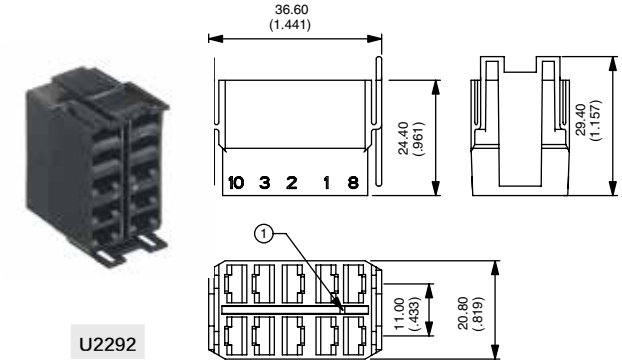

U2292

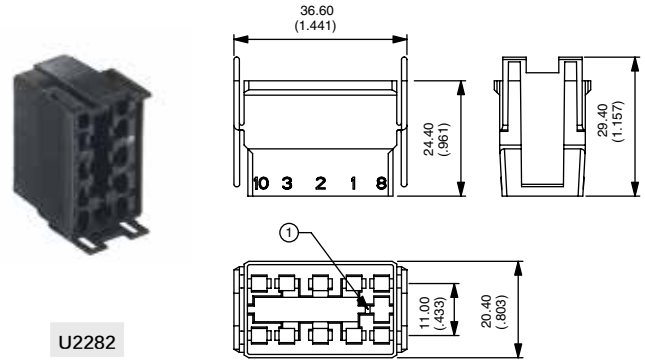

U2282

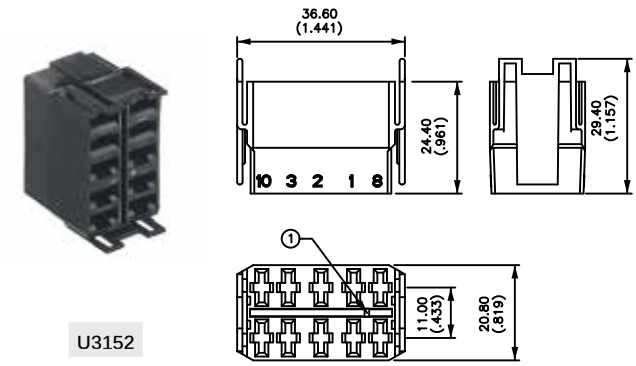

U3152