WWW.TENGTOOLS.COM



26" PRO35™ STACK TOOL KIT 753 PIECES RED

- Three 26" tool storage units stacked containing a 753-piece tool kit for extensive automotive and mechanical tasks
- Heavy gauge steel construction with a 5-step phosphate-free rust prevention process and a powder coat finish
- 5" heavy-duty castors for easy mobility across various workshop surfaces and 3-digit combination lock on each unit
- 16 drawers, all with full extension ball bearing slides and noise-reducing EVA drawer mats
- Tool chests with recessed carrying handles at both ends
- TengTools Tool Control System for organized and accessible tool arrangement

The TengTools 26" PRO35™ stack tool kit TKS26R753T in matte red finish is a robust 753-piece kit designed for automotive and mechanical professionals requiring a comprehensive selection of tools. The tool kit offers a versatile selection of useful tools, including 1/4", 3/8", and 1/2" drive sockets, bit sockets, ratchets, impact tools, combination spanners, screwdrivers, bits, T-handle hex & tx keys, pliers, torque wrenches, inch spanners & sockets, and various general tools. The tools are methodically arranged in 11 of the 16 extendable drawers. With five empty drawers there is space to expand which makes it a flexible asset in dynamic professional workspaces. The TengTools Tool Control System ensures organized storage and quick identification of any tools that are missing or misplaced. This comprehensive 16-drawer 26" tool kit in 3 tiers includes the TSW26R9 9-drawer roller cabinet, the TSM26R3 3-drawer tool chest, and the TST26R4 4-drawer tool chest on top. Each drawer is fully extendable and has a holding capacity between 30 to 40 kg to ensure they can comfortably accommodate a variety of tools. Each drawer is fitted with smooth running ball bearing slides and a noise reducing EVA mat for added protection. The storage units are made of heavy gauge steel and have been treated with a 5-step phosphate-free rust prevention process to resist corrosion. Each unit has a separate 3-digit combination lock to prevent unauthorised access. A comfort handle is located on the side of the roller cabinet to facilitate movement. It is also equipped with heavy duty 2" wide castors, two of which are 5" braked swivel castors and two are 5" fixed for easy manoeuvring across workshop floors. The fold-down front of the top tool chest features the TengTools logo, adding a unique touch. The tool chests have recessed side handles to make them easy to carry and move. The tool kit includes a practical holder for paper rolls (TCA08).

General information

Country of origin: Taiwan
Barcode: 5020385215474
Tarriff code Europe: 8206000000
ECCN US: EAR99
UNSPSC: 27113201

Dimensions

Net weight (g): 164980
Width (mm): 680
Depth (mm): 460
Height (mm): 1570
Max static load: 530 kg
Max dynamic load: 330 kg
Number of drawer: 16
Drawer capacity: 7 × 30 kg, 9 × 40 kg
Drawer depth: 7 × 275 mm, 9 × 380 mm
Drawer height: 5 × 50 mm, 11 × 75 mm
Drawer width: 7 × 569 mm, 9 × 575 mm

Attributes

Product type: Mobile Tool Kits
User segment: Auto, Mechanic
Number of pieces: 753
Inlay material: PS
Colour: Red
Castor size: 5" x 1-1/4"
Braked swivel castors: 2
Fixed castors: 2
Type of work top: 5 mm EVA mat

Features



Technical changes and errors may occur. 01-08-2024 20:00

DESIGNED IN SWEDEN

TengTools is a Swedish company present in more than 30 markets worldwide, and offers hand tools in smart storage solutions for demanding professionals within the automotive, maintenance and engineering sectors, as well as motor sport enthusiasts who aspire to use the same tools as top mechanics across the globe.

Sandbergsvägen 3
441 39 Alingsås, Sweden

SPARE PART LIST

TSW26R9
Version: 3

WWW.TENGTOOLS.COM

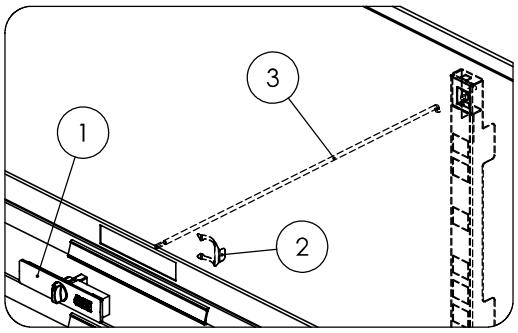

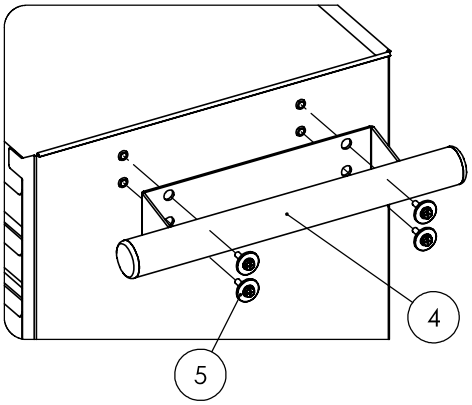

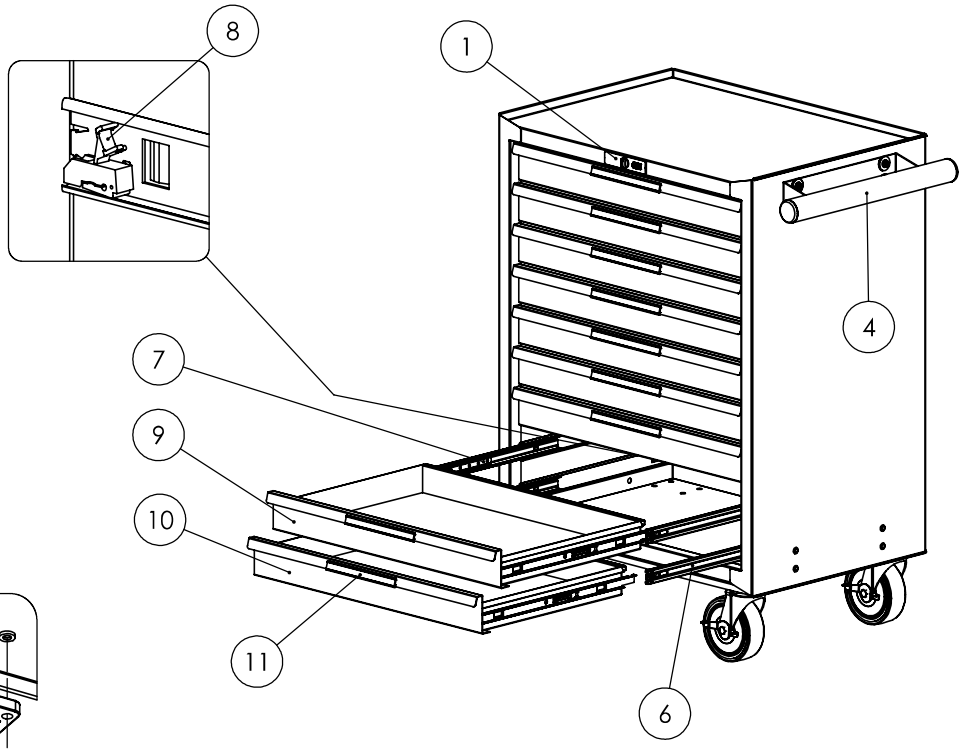

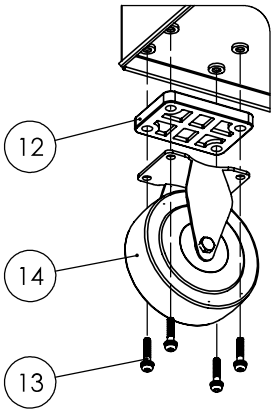

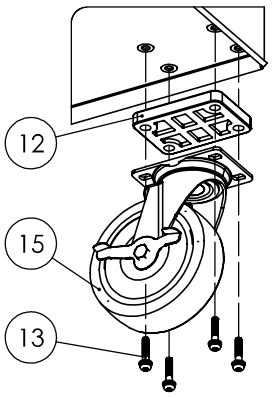

POS	DESCRIPTION	ITEM ID
1A	Combination Lock 180°	TC-180CLOCK
1B	Key cylinder lock 180° (optional)	TC-180KEYLOCK
2	Cam for lock (included in Pos 1)	TCW806N-02
3	Locking bar	TCW603-01
4	Side handle	TCW807NBK1-14
5	Screws for side handle (4pcs)	TCW603-08
6	Slider 16" 36 mm Right (1pc)	TCW810N-05
7	Slider 16" 36 mm Left (1pc)	TCW810N-06
8	Clip for slider (included in Pos 6 & 7)	TC803N-13
9	Drawer 575 x 380 x 75 mm Red	TSW26R-75
10	Drawer 575 x 380 x 75 mm Red with Logo	TSW26RF-75
11A	Aluminium drawer handle (3 pcs)	ALUE803
11B	Aluminium drawer handle (4 pcs)	ALUE804
12	Plastic spacer for casters 10 mm (1 pc)	TCW603-03
13	Screws for casters (4 pcs)	TCW603-09
14	Fixed casters 5" x 1-1/4" (1 pc)	TCW807N-13
15	Swivel casters 5" x 1-1/4" (1 pc)	TCW807N-12

SPARE PART LIST

TST26R4
Version: 3

WWW.TENGTOOLS.COM

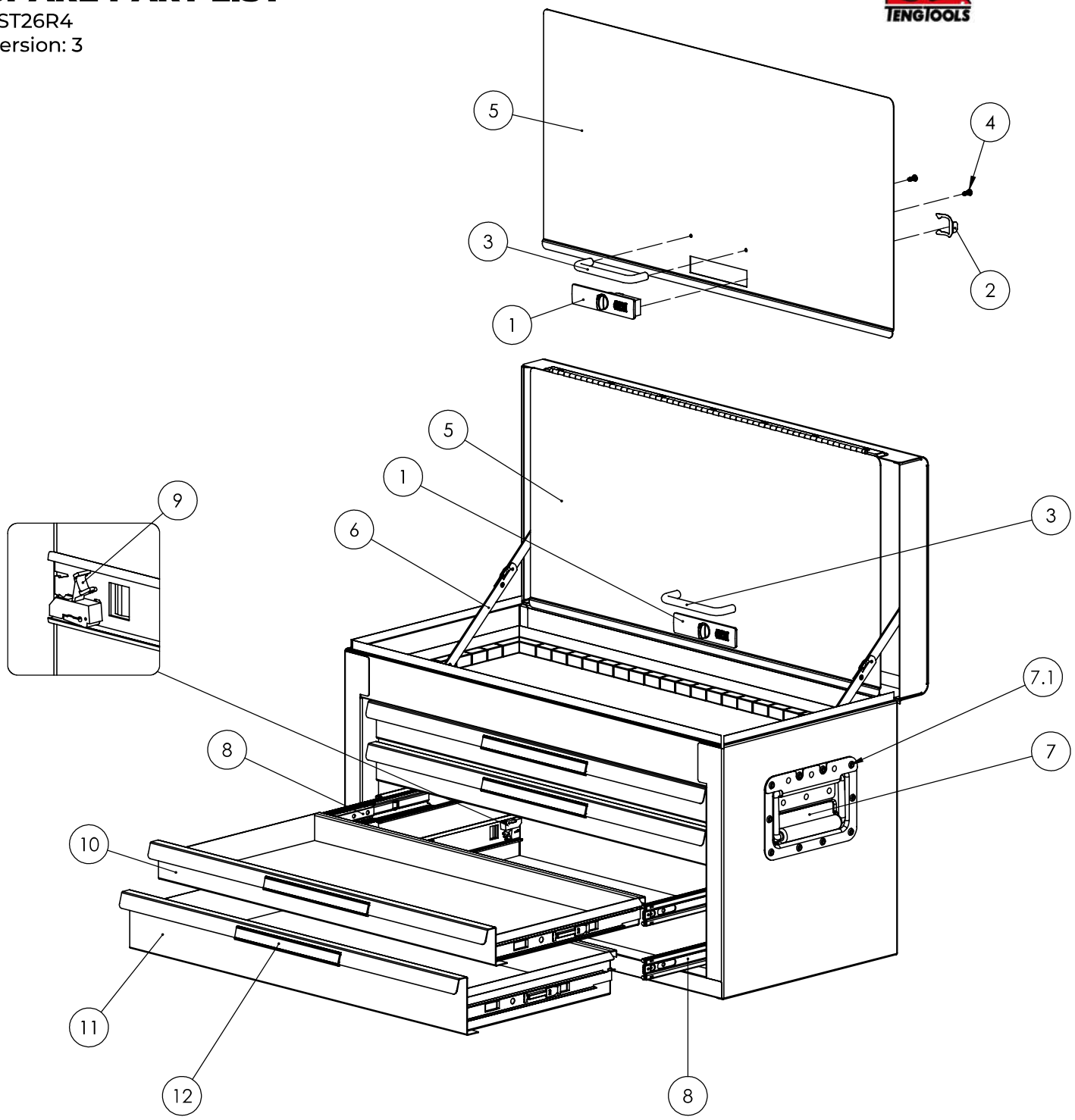

POS	DESCRIPTION	ITEM ID
1A	Combination lock 90°	TC-90CLOCK
1B	Key cylinder lock 90° (optional)	TC-90KEYLOCK
2	Cam for lock (inluded in Pos 1)	TC803-05
3	Drop front handle Black	TC805NFXBK1-10
4	Screws for drop front handle (2 pcs)	TC606-10
5	Drop front 26" with Logo Red	TC806NF-13
6	Lid stay (1 pc)	TC606-12
7	Retractable side handle	TCDSHA
7.1	Rivets: 4,8mm x 7,4mm Black (10 pcs)	-
8	Slider 10" 36 mm Left/Right (1pc)	TC803N-03
9	Clip for slider (included in Pos 8)	TC803N-13
10	Drawer 569 x 275 x 50 mm Red	TST26R-50
11	Drawer 569 x 275 x 75 mm Red	TST26R-75
12A	Aluminium drawer handle (3 pcs)	ALUE803
12B	Aluminium drawer handle (4 pcs)	ALUE804

SPARE PART LIST

TSM26R3
Version: 3

WWW.TENGTOOLS.COM

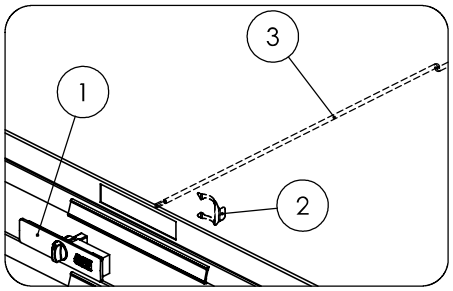

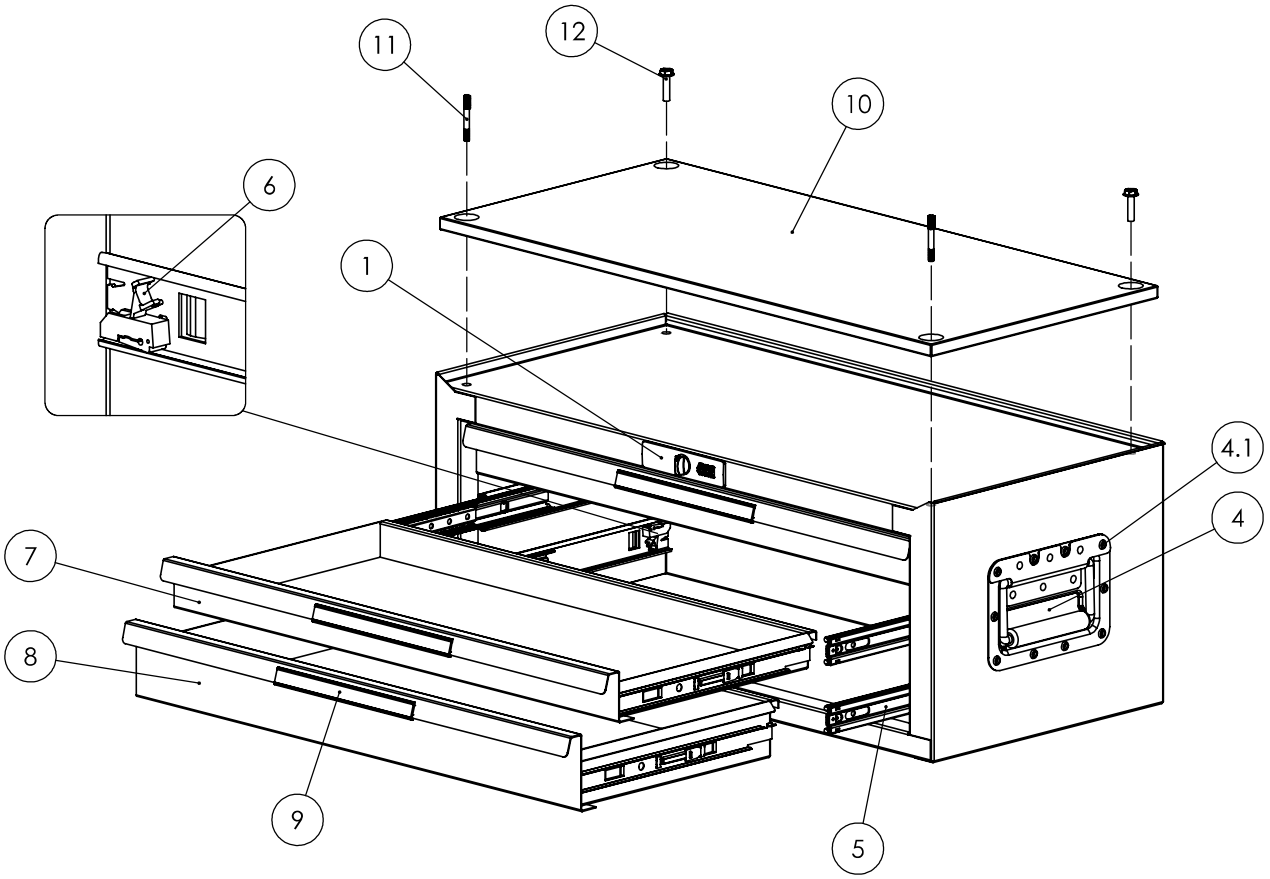

POS	DESCRIPTION	ITEM ID
1A	Combination Lock 180°	TC-180CLOCK
1B	Key cylinder lock 180° (optional)	TC-180KEYLOCK
2	Cam for lock (included in Pos 1)	TC803-05
3	Locking bar	TC603-11
4	Retractable side handle	TCDSHA
4.1	Rivets: 4,8mm x 7,4mm Black (10 pcs)	-
5	Slider 10" 36 mm Left/Right (1pc)	TC803N-03
6	Clip for sliders (included in Pos 5)	TC803N-13
7	Drawer 569 x 275 x 50 mm Red	TST26R-50
8	Drawer 569 x 275 x 75 mm Red	TST26R-75
9A	Aluminium drawer handle (3 pcs)	ALUE803
9B	Aluminium drawer handle (4 pcs)	ALUE804
10	Foam between middle & top box	TC603-10
11*	Screw pin for top box (1 pc)	TC603-09
12*	Screws for top box M6 x 25 mm (2 pcs)	-

* Pos. 11 & 12 only used together with TST26R4

ADDITIONAL IMAGES



























LIST OF CONTENTS

TKS26R753T 26" PRO35™ stack tool kit 753 pieces red

- **TCA08** Paper roll holder for side handle
- **TCF05** Fixing brackets for 26" 3-drawer tool chest
- **TSM26R3** 26" PRO35™ tool chest 3 drawers red
- **TST26R4** 26" PRO35™ tool chest 4 drawers red
- **TSW26R9** 26" PRO35™ roller cabinet 9 drawers red
- **TT01** Storage Tray TT1 7 Compartments
- **TT03** Storage Tray TT1 4 Compartments
- **TT1205** 1/2" Ratchet & Accessories Set TT1 5 Pieces
  - **1200-72U** 1/2" Ratchet 72 Teeth IP5X
  - **M120021-C** 1/2" Extension Bar 125 mm
  - **M120022-C** 1/2" Extension Bar 255 mm
  - **M120030-C** 1/2" Universal Joint
  - **M380036-C** Step Up Adaptor 3/8"F - 1/2"M
- **TT1215AF** 1/2" Socket Set 12 pt AF TT1 15 Pieces
  - **M120112-C** 1/2" Socket 12 pt AF 3/8"
  - **M120114-C** 1/2" Socket 12 pt AF 7/16"
  - **M120116-C** 1/2" Socket 12 pt AF 1/2"
  - **M120118-C** 1/2" Socket 12 pt AF 9/16"
  - **M120120-C** 1/2" Socket 12 pt AF 5/8"
  - **M120122-C** 1/2" Socket 12 pt AF 11/16"
  - **M120124-C** 1/2" Socket 12 pt AF 3/4"
  - **M120126-C** 1/2" Socket 12 pt AF 13/16"
  - **M120128-C** 1/2" Socket 12 pt AF 7/8"
  - **M120130-C** 1/2" Socket 12 pt AF 15/16"
  - **M120132-C** 1/2" Socket 12 pt AF 1"
  - **M120134-C** 1/2" Socket 12 pt AF 1-1/16"
  - **M120136-C** 1/2" Socket 12 pt AF 1-1/8"
  - **M120138-C** 1/2" Socket 12 pt AF 1-3/16"
  - **M120140-C** 1/2" Socket 12 pt AF 1-1/4"
- **TT1217-6** 1/2" Socket Set 6 pt TT1 17 Pieces
  - **M1205106-C** 1/2" Socket 6 pt Metric 10 mm
  - **M1205116-C** 1/2" Socket 6 pt Metric 11 mm
  - **M1205126-C** 1/2" Socket 6 pt Metric 12 mm
  - **M1205136-C** 1/2" Socket 6 pt Metric 13 mm
  - **M1205146-C** 1/2" Socket 6 pt Metric 14 mm
  - **M1205156-C** 1/2" Socket 6 pt Metric 15 mm
  - **M1205166-C** 1/2" Socket 6 pt Metric 16 mm
  - **M1205176-C** 1/2" Socket 6 pt Metric 17 mm
  - **M1205186-C** 1/2" Socket 6 pt Metric 18 mm
  - **M1205196-C** 1/2" Socket 6 pt Metric 19 mm

WWW.TENGTOOLS.COM

M1205206-C	1/2" Socket 6 pt Metric 20 mm
M1205216-C	1/2" Socket 6 pt Metric 21 mm
M1205226-C	1/2" Socket 6 pt Metric 22 mm
M1205246-C	1/2" Socket 6 pt Metric 24 mm
M1205276-C	1/2" Socket 6 pt Metric 27 mm
M1205306-C	1/2" Socket 6 pt Metric 30 mm
M1205326-C	1/2" Socket 6 pt Metric 32 mm

TT1236 Combination Spanner Set TT1 12 Pieces

600508	Combination Spanner Metric 8 mm
600509	Combination Spanner Metric 9 mm
600510	Combination Spanner Metric 10 mm
600511	Combination Spanner Metric 11 mm
600512	Combination Spanner Metric 12 mm
600513	Combination Spanner Metric 13 mm
600514	Combination Spanner Metric 14 mm
600515	Combination Spanner Metric 15 mm
600516	Combination Spanner Metric 16 mm
600517	Combination Spanner Metric 17 mm
600518	Combination Spanner Metric 18 mm
600519	Combination Spanner Metric 19 mm

TT1435 1/4" Socket Set 6 pt TT1 35 Pieces

1400-72U	1/4" Ratchet 72 Teeth IP5X
FL2508A03	1/4" Flat Bits 25 mm 0.8 × 4.0 mm
FL2508B03	1/4" Flat Bits 25 mm 0.8 × 5.5 mm
HEX2500503	1/4" Hex Bits 25 mm 5 mm
HEX2500603	1/4" Hex Bits 25 mm 6 mm
M140015-C	1/4" Spinner Handle
M140020-C	1/4" Extension Bar 50 mm
M140021-C	1/4" Extension Bar 100 mm
M140030-C	1/4" Universal Joint
M140060-C	1/4" Bit Adaptor Hex Bit Coupler
M140504-C	1/4" Socket 6 pt Metric 4 mm
M140505-C	1/4" Socket 6 pt Metric 5 mm
M1405055-C	1/4" Socket 6 pt Metric 5.5 mm
M140506-C	1/4" Socket 6 pt Metric 6 mm
M140507-C	1/4" Socket 6 pt Metric 7 mm
M140508-C	1/4" Socket 6 pt Metric 8 mm
M140509-C	1/4" Socket 6 pt Metric 9 mm
M140510-C	1/4" Socket 6 pt Metric 10 mm
M140511-C	1/4" Socket 6 pt Metric 11 mm
M140512-C	1/4" Socket 6 pt Metric 12 mm
M140513-C	1/4" Socket 6 pt Metric 13 mm
M140606-C	1/4" Deep Socket 6 pt Metric 6 mm

M140607-C 1/4" Deep Socket 6 pt Metric 7 mm

M140608-C 1/4" Deep Socket 6 pt Metric 8 mm

M140610-C 1/4" Deep Socket 6 pt Metric 10 mm

M140612-C 1/4" Deep Socket 6 pt Metric 12 mm

M140613-C 1/4" Deep Socket 6 pt Metric 13 mm

M380035-C Reducing Adaptor 3/8"F - 1/4"M

PH2500103 1/4" PH Bits 25 mm PH1

PH2500203 1/4" PH Bits 25 mm PH2

PZ2500103 1/4" PZ Bits 25 mm PZ1

PZ2500203 1/4" PZ Bits 25 mm PZ2

TPX2501003 1/4" TPX Bits 25 mm TPX10

TPX2501503 1/4" TPX Bits 25 mm TPX15

TPX2502003 1/4" TPX Bits 25 mm TPX20

TT3592 Combination Spanner Set AF TT1 8 Pieces

600110 Combination Spanner AF 5/16"

600112 Combination Spanner AF 3/8"

600114 Combination Spanner AF 7/16"

600116 Combination Spanner AF 1/2"

600118 Combination Spanner AF 9/16"

600120 Combination Spanner AF 5/8"

600122 Combination Spanner AF 11/16"

600124 Combination Spanner AF 3/4"

TT3819 3/8" Socket Set 6 pt TT1 19 Pieces

3800-72U 3/8" Ratchet 72 Teeth IP5X

M120036-C Reducing Adaptor 1/2"F - 3/8"M

M380020W-C 3/8" Wobble Extension Bar 75 mm

M380030-C 3/8" Universal Joint

M380060-C 3/8" Bit Adaptor Hex bit coupler 1/4" Hex

M380508-C 3/8" Socket 6 pt Metric 8 mm

M380509-C 3/8" Socket 6 pt Metric 9 mm

M380510-C 3/8" Socket 6 pt Metric 10 mm

M380511-C 3/8" Socket 6 pt Metric 11 mm

M380512-C 3/8" Socket 6 pt Metric 12 mm

M380513-C 3/8" Socket 6 pt Metric 13 mm

M380514-C 3/8" Socket 6 pt Metric 14 mm

M380515-C 3/8" Socket 6 pt Metric 15 mm

M380516-C 3/8" Socket 6 pt Metric 16 mm

M380517-C 3/8" Socket 6 pt Metric 17 mm

M380518-C 3/8" Socket 6 pt Metric 18 mm

M380519-C 3/8" Socket 6 pt Metric 19 mm

M380522-C 3/8" Socket 6 pt Metric 22 mm

PT3810R 3/8" Rotating Spinner Handle

TT440Q Plier Set Vinyl Grip Q TT1 4 Pieces

MB441-6 Side Cutting Plier 160 mm

MB452-7 Heavy Duty Combination Plier 185 mm

MB461-8 Long Nose Plier 200 mm

MB482-10Q Quick Set Water Pump Plier HRC60 250 mm

TT474-7E Circlip Plier Set PRO 19-60 mm TT1 4 Pieces

MBE470-7 Circlip Plier Inner Straight PRO 175 mm

MBE471-7 Circlip Plier Inner Bent PRO 175 mm

MBE472-7 Circlip Plier Outer Straight PRO 175 mm

MBE473-7 Circlip Plier Outer Bent PRO 165 mm

TT6506 Double Flex Wrench Set TT1 6 Pieces

650809 Double Flex Wrench Metric 8 × 9 mm

651011 Double Flex Wrench Metric 10 × 11 mm

651213 Double Flex Wrench Metric 12 × 13 mm

651415 Double Flex Wrench Metric 14 × 15 mm

651617 Double Flex Wrench Metric 16 × 17 mm

651819 Double Flex Wrench Metric 18 × 19 mm

TT804 Puller Set TT1 4 Pieces

TT804-01 Spare Parts for Puller Set TT804 Long Screw

TT804-02 Spare Parts for Puller Set TT804 Replacement Arm

TT804-03 Spare Parts for Puller Set TT804 Plate

TT804-04 Spare Parts for Puller Set TT804 Screw

TT804-05 Spare Parts for Puller Set TT804 Three Arm Holder

TT804-06 Spare Parts for Puller Set TT804 Two Arm Holder

TT9116N 1/2" Impact Socket Set ANSI TT1 16 Pieces

920513AN 1/2" Impact Socket ANSI Metric 13 mm

920515AN 1/2" Impact Socket ANSI Metric 15 mm

920516AN 1/2" Impact Socket ANSI Metric 16 mm

920517AN 1/2" Impact Socket ANSI Metric 17 mm

920518AN 1/2" Impact Socket ANSI Metric 18 mm

920519AN 1/2" Impact Socket ANSI Metric 19 mm

920522AN 1/2" Impact Socket ANSI Metric 22 mm

920524AN 1/2" Impact Socket ANSI Metric 24 mm

920613AN 1/2" Deep Impact Socket ANSI Metric 13 mm

920615AN 1/2" Deep Impact Socket ANSI Metric 15 mm

920616AN 1/2" Deep Impact Socket ANSI Metric 16 mm

920617AN 1/2" Deep Impact Socket ANSI Metric 17 mm

920618AN 1/2" Deep Impact Socket ANSI Metric 18 mm

920619AN 1/2" Deep Impact Socket ANSI Metric 19 mm

920622AN 1/2" Deep Impact Socket ANSI Metric 22 mm

920624AN 1/2" Deep Impact Socket ANSI Metric 24 mm

TT917N Screwdriver Set Mixed TT1 7 Pieces

MD920N Flat Screwdriver 0.5 × 3.0 × 75 mm S

MD922N Flat Screwdriver 1.0 × 5.5 × 75 mm S

MD932N Flat Screwdriver 1.2 × 6.5 × 100 mm L Hex Shaft

MD940N PH Screwdriver PH0 × 75 mm S

MD947N1 PH Screwdriver PH1 × 75 mm M

MD952N PH Screwdriver PH2 × 100 mm L Hex Shaft

MD962N2 PZ Screwdriver PZ2 × 100 mm L Hex Shaft

TT917TXN Screwdriver Set TX & TPX TT1 7 Pieces

MD610TPN TPX Screwdriver TPX10 × 100 mm M

MD615TPN TPX Screwdriver TPX15 × 100 mm M

MD620TPN TPX Screwdriver TPX20 × 100 mm M

MD625TPN TPX Screwdriver TPX25 × 100 mm L

MD630TPN TPX Screwdriver TPX30 × 100 mm L

MD908TN TX Screwdriver TX8 × 75 mm S

MD909TN TX Screwdriver TX9 × 75 mm S

TTAF32 1/4" & 3/8" Socket Set AF 6 pt TT1 32 Pieces

M140106-C 1/4" Socket 6 pt AF 3/16"

M140107-C 1/4" Socket 6 pt AF 7/32"

M140108-C 1/4" Socket 6 pt AF 1/4"

M140109-C 1/4" Socket 6 pt AF 9/32"

M140110-C 1/4" Socket 6 pt AF 5/16"

M140111-C 1/4" Socket 6 pt AF 11/32"

M140112-C 1/4" Socket 6 pt AF 3/8"

M140114-C 1/4" Socket 6 pt AF 7/16"

M140116-C 1/4" Socket 6 pt AF 1/2"

M140206-C 1/4" Deep Socket 6 pt AF 3/16"

M140207-C 1/4" Deep Socket 6 pt AF 7/32"

M140208-C 1/4" Deep Socket 6 pt AF 1/4"

M140209-C 1/4" Deep Socket 6 pt AF 9/32"

M140210-C 1/4" Deep Socket 6 pt AF 5/16"

M140211-C 1/4" Deep Socket 6 pt AF 11/32"

M140212-C 1/4" Deep Socket 6 pt AF 3/8"

M140214-C 1/4" Deep Socket 6 pt AF 7/16"

M140216-C 1/4" Deep Socket 6 pt AF 1/2"

M380112-C 3/8" Socket 6 pt AF 3/8"

M380114-C 3/8" Socket 6 pt AF 7/16"

M380116-C 3/8" Socket 6 pt AF 1/2"

M380118-C 3/8" Socket 6 pt AF 9/16"

M380120-C 3/8" Socket 6 pt AF 5/8"

M380122-C 3/8" Socket 6 pt AF 11/16"

M380124-C 3/8" Socket 6 pt AF 3/4"

M380212-C 3/8" Deep Socket 6 pt AF 3/8"

M380214-C 3/8" Deep Socket 6 pt AF 7/16"

M380216-C 3/8" Deep Socket 6 pt AF 1/2"

M380218-C	3/8" Deep Socket 6 pt AF 9/16"
M380220-C	3/8" Deep Socket 6 pt AF 5/8"
M380222-C	3/8" Deep Socket 6 pt AF 11/16"
M380224-C	3/8" Deep Socket 6 pt AF 3/4"

TTALU Clip Rail Set TT1 32 Pieces

ALU12	Socket Clips 10 × 1/2"
ALU14	Socket Clips 10 × 1/4"
ALU38	Socket Clips 10 × 3/8"

TTALU Clip Rail Set TT1 32 Pieces

ALU12	Socket Clips 10 × 1/2"
ALU14	Socket Clips 10 × 1/4"
ALU38	Socket Clips 10 × 3/8"

TTHEX23 1/2" Hex Bit Socket Set TT1 23 Pieces

210705	Hex Bits 40 mm 5 mm
210706	Hex Bits 40 mm 6 mm
210707	Hex Bits 40 mm 7 mm
210708	Hex Bits 40 mm 8 mm
210709	Hex Bits 40 mm 9 mm
210710	Hex Bits 40 mm 10 mm
210712	Hex Bits 40 mm 12 mm
210714	Hex Bits 40 mm 14 mm
210717	Hex Bits 40 mm 17 mm
210719	Hex Bits 40 mm 19 mm
210805	Hex Bits 75 mm 5 mm
210806	Hex Bits 75 mm 6 mm
210807	Hex Bits 75 mm 7 mm
210808	Hex Bits 75 mm 8 mm
210809	Hex Bits 75 mm 9 mm
210810	Hex Bits 75 mm 10 mm
210812	Hex Bits 75 mm 12 mm
210814	Hex Bits 75 mm 14 mm
210817	Hex Bits 75 mm 17 mm
210819	Hex Bits 75 mm 19 mm
M120061-C	1/2" Bit Adaptor 10 mm
M120062-C	1/2" Bit Adaptor 12 mm
MDM711	Hex Mini Screwdriver 2

TTHEX7 T-Handle Ball Point Hex Key Set TT1 7 Pieces

5105025	T Handle Ball Point Hex Key Metric 2.5 mm
510503	T Handle Ball Point Hex Key Metric 3 mm
510504	T Handle Ball Point Hex Key Metric 4 mm
510505	T Handle Ball Point Hex Key Metric 5 mm
510506	T Handle Ball Point Hex Key Metric 6 mm

510507 T Handle Ball Point Hex Key Metric 7 mm

510508 T Handle Ball Point Hex Key Metric 8 mm

TTHP08 Hook & Pin Wrench Set TT1 8 Pieces

HP101 Hook Wrench 19 - 50 mm

HP102 Hook Wrench 32 - 75 mm

HP103 Hook Wrench 50 - 120 mm

HP2014-PA Pin Arm 4 mm, 19 - 50 mm

HP2025-PA Pin Arm 5 mm, 32 - 75 mm

HP2026-P Pin 6 mm, 19 - 50 mm & 32 - 75 mm

HP2036-PA Pin Arm 6 mm, 50 - 120 mm

HP2038-P Pin 8 mm, 50 - 120 mm

TTHR81 Rivet Gun Set TT1 81 Pieces

HR01 Hand Rivet Gun Aluminium Alloy 2.4/3.2/4.0/4.8 mm

TTID20 1/2" Impact Driver Set TT1 20 Pcs

910504 5/16" Hex Impact Driver Bits 4 mm

910505 5/16" Hex Impact Driver Bits 5 mm

910506 5/16" Hex Impact Driver Bits 6 mm

910508 5/16" Hex Impact Driver Bits 8 mm

920060-C 1/2" Impact Coupler Adaptor 5/16" Hex

930001 5/16" PH Impact Driver Bits PH1

930002 5/16" PH Impact Driver Bits PH2

930003 5/16" PH Impact Driver Bits PH3

930004 5/16" PH Impact Driver Bits PH4

940006 5/16" Flat Impact Driver Bits 6 mm

940008 5/16" Flat Impact Driver Bits 8 mm

940010 5/16" Flat Impact Driver Bits 10 mm

940012 5/16" Flat Impact Driver Bits 12 mm

970030 5/16" TX Impact Driver Bits TX30

970040 5/16" TX Impact Driver Bits TX40

970045 5/16" TX Impact Driver Bits TX45

970050 5/16" TX Impact Driver Bits TX50

970055 5/16" TX Impact Driver Bits TX55

980086 Hex Socket Adaptor 5/16" Hex - 3/8"

ID512A 1/2" Impact Driver Heavy Duty

TTMD74 Ratcheting Screwdriver Bit Set TT1 74 Pieces

FL2506A03 1/4" Flat Bits 25 mm 0.6 × 3.5 mm

FL2506B03 1/4" Flat Bits 25 mm 0.6 × 4.5 mm

FL2507A03 1/4" Flat Bits 25 mm 7 mm

FL2508A03 1/4" Flat Bits 25 mm 0.8 × 4.0 mm

FL2508B03 1/4" Flat Bits 25 mm 0.8 × 5.5 mm

FL2508B03 1/4" Flat Bits 25 mm 0.8 × 5.5 mm

FL2508B03 1/4" Flat Bits 25 mm 0.8 × 5.5 mm

FL2512A03 1/4" Flat Bits 25 mm 1.2 × 6.5 mm

FL2516A03 1/4" Flat Bits 25 mm 1.6 × 8.0 mm

GR25002010 1/4" PH G Bits 25 mm PH2G

GR25002010 1/4" PH G Bits 25 mm PH2G

GR25002010 1/4" PH G Bits 25 mm PH2G

HEX2500203 1/4" Hex Bits 25 mm 2 mm

HEX2500303 1/4" Hex Bits 25 mm 3 mm

HEX2500403 1/4" Hex Bits 25 mm 4 mm

HEX2500503 1/4" Hex Bits 25 mm 5 mm

HEX2500603 1/4" Hex Bits 25 mm 6 mm

HEX2500803 1/4" Hex Bits 25 mm 8 mm

M140060-C 1/4" Bit Adaptor Hex Bit Coupler

MDR908 1/4" Ratcheting Bits Driver Set

- **FL2507A03** 1/4" Flat Bits 25 mm 7 mm
- **FL2510A03** 1/4" Flat Bits 25 mm 1.0 × 5.5 mm
- **M140037** Hex Socket Adaptor 1/4" Hex - 1/4" 25 mm
- **PH2500103** 1/4" PH Bits 25 mm PH1
- **PH2500203** 1/4" PH Bits 25 mm PH2
- **PZ2500103** 1/4" PZ Bits 25 mm PZ1
- **PZ2500203** 1/4" PZ Bits 25 mm PZ2

PH2500103 1/4" PH Bits 25 mm PH1

PH2500103 1/4" PH Bits 25 mm PH1

PH2500103 1/4" PH Bits 25 mm PH1

PH2500103 1/4" PH Bits 25 mm PH1

PH2500203 1/4" PH Bits 25 mm PH2

PH2500203 1/4" PH Bits 25 mm PH2

PH2500203 1/4" PH Bits 25 mm PH2

PH2500203 1/4" PH Bits 25 mm PH2

PH2500203 1/4" PH Bits 25 mm PH2

PH2500203 1/4" PH Bits 25 mm PH2

PH2500203 1/4" PH Bits 25 mm PH2

PH2500203 1/4" PH Bits 25 mm PH2

PH2500303 1/4" PH Bits 25 mm PH3

PZ2500103 1/4" PZ Bits 25 mm PZ1

PZ2500103 1/4" PZ Bits 25 mm PZ1

PZ2500103 1/4" PZ Bits 25 mm PZ1

PZ2500103 1/4" PZ Bits 25 mm PZ1

PZ2500203 1/4" PZ Bits 25 mm PZ2

PZ2500203 1/4" PZ Bits 25 mm PZ2

PZ2500203 1/4" PZ Bits 25 mm PZ2

PZ2500203 1/4" PZ Bits 25 mm PZ2

PZ2500203 1/4" PZ Bits 25 mm PZ2

PZ2500203 1/4" PZ Bits 25 mm PZ2

PZ2500203 1/4" PZ Bits 25 mm PZ2

PZ2500303 1/4" PZ Bits 25 mm PZ3

ROB2500103 1/4" ROB Bits 25 mm ROB1

ROB2500203 1/4" ROB Bits 25 mm ROB2

ROB2500303 1/4" ROB Bits 25 mm ROB3

TPX2501003 1/4" TPX Bits 25 mm TPX10

TPX2501503 1/4" TPX Bits 25 mm TPX15

TPX2502003 1/4" TPX Bits 25 mm TPX20

TPX2502003 1/4" TPX Bits 25 mm TPX20

TPX2502503 1/4" TPX Bits 25 mm TPX25

TPX2502503 1/4" TPX Bits 25 mm TPX25

TPX2502703 1/4" TPX Bits 25 mm TPX27

TPX2503003 1/4" TPX Bits 25 mm TPX30

TPX2504003 1/4" TPX Bits 25 mm TPX40

TTMD74-1 1/4" Bits Driver Extension 100 mm

TTMD74-2 1/4" Bits Driver Extension 150 mm Flexible

TX2500603 1/4" TX Bits 25 mm TX6

TX2500703 1/4" TX Bits 25 mm TX7

TX2500803 1/4" TX Bits 25 mm TX8

TX2500903 1/4" TX Bits 25 mm TX9

TX2501003 1/4" TX Bits 25 mm TX10

TX2501503 1/4" TX Bits 25 mm TX15

TX2502003 1/4" TX Bits 25 mm TX20

TX2502003 1/4" TX Bits 25 mm TX20

TX2502003 1/4" TX Bits 25 mm TX20

TX2502503 1/4" TX Bits 25 mm TX25

TX2502503 1/4" TX Bits 25 mm TX25

TX2502503 1/4" TX Bits 25 mm TX25

TX2502703 1/4" TX Bits 25 mm TX27

TX2503003 1/4" TX Bits 25 mm TX30

TX2504003 1/4" TX Bits 25 mm TX40

TTMDP Hock & Pick Set TT1 4 Pieces

MDA180 Awl Straight

MDP125 Hook Tool 125°

MDP35 Hook Tool 35°

MDP90 Cotter Pin Puller S

TTMI16 Mini Pliers & Screwdriver Set TT1 16 Pieces

MBM441 Mini Side Cutting Plier 115 mm

MBM449 Mini End Cutting Plier 110 mm

MBM461 Mini Long Nose Plier 140 mm

MBM464 Mini Flat Nose Plier 140 mm

MDM713 Flat Mini Screwdriver 2 mm

MDM714 Flat Mini Screwdriver 2.5 mm

MDM715 Flat Mini Screwdriver 3 mm

MDM716 PH Mini Screwdriver PH00

MDM717 PH Mini Screwdriver PH0

MDM718 PH Mini Screwdriver PH1

MDM806 TX Mini Screwdriver TX6

MDM807 TX Mini Screwdriver TX7

MDM808 TX Mini Screwdriver TX8

MDM809 TX Mini Screwdriver TX9

MDM810 TX Mini Screwdriver TX10

MDM815 TX Mini Screwdriver TX15

TTNR81 Nutsert Gun Set TT1 81 Pieces

HN02 Nutsert Gun M3/M4/M5/M6

TTOS16 Oil Service Set TT1 16 Pieces

582MI Telescopic Inspection Tool 3 in 1

9110 1/2" Oil Filter Removal Tool Strap Type 130 mm

DP0810 Drain Plug 8 mm Hex × 10 mm Hex

DP0812 Drain Plug 8 mm Square × 3/8" Square

DP1012 Drain Plug 5/16" Hex × 3/8" Hex

DP1112 Drain Plug 11 mm Square × 12 mm Hex

DP1314 Drain Plug 13 mm Square × 14 mm Hex

DP1716 Drain Plug 17 mm Hex × 1/2" Hex

FG20100 Feeler Gauge 0,05-1,0 mm 100 mm 20 Blades

M120036-C Reducing Adaptor 1/2"F - 3/8"M

M380020-C 3/8" Extension Bar 75 mm

M380022W-C 3/8" Wobble Extension Bar 255 mm

M380040-C 3/8" Spark Plug Socket 16 mm

M380046-C 3/8" Spark Plug Socket 21 mm

M380521-C 3/8" Socket 6 pt Metric 21 mm

TTPC09 Punch & Chisel Set TT1 9 Pieces

CC150F Flat Cold Chisel 150 × 18 mm

CC200F Flat Cold Chisel 200 × 25 mm

CP05 Centre Punch 5 mm

PP03 Parallel Pin Punch 3 mm

PP04 Parallel Pin Punch 4 mm

PP05 Parallel Pin Punch 5 mm

PP06 Parallel Pin Punch 6 mm

PP07 Parallel Pin Punch 7 mm

PP08 Parallel Pin Punch 8 mm

TTPS09 General Tool Set BP TT4 9 Pieces

4002 Adjustable Wrench 150 mm

4004 Adjustable Wrench 250 mm

401-10 Curved Jaw Power Grip Plier 235 mm

701 Hacksaw 24TPI Metal

710 Utility Knife

HMBP24	Ball Pein Hammer 24oz
HMSF	Soft Face Hammer
MT03	Measuring Tape Metric/Inch 3m
ST200	Steel Rule mm/AF 200 mm

TTSN11 Extractor & Nut Splitter Set TT1 11 Pieces

NS02	Nut Splitter Set 2 Pieces
SE05	Screw Extractor Set Spiral 5 Pieces
ST12506-C	1/2" Stud Extractor Socket 6 mm
ST12508-C	1/2" Stud Extractor Socket 8 mm
ST12510-C	1/2" Stud Extractor Socket 10 mm
ST12512-C	1/2" Stud Extractor Socket 12 mm

TTTD17 Tap and Die Set TT1 17 Pieces

DIE-HNDL	Die Handle M3 - M12
SCPG	Pitch Gauge
TAP-HNDL	Tap Handle M3 - M12
TDD03050	Die M3 × 0,5
TDD04070	Die M4 × 0,7
TDD05080	Die M5 × 0,8
TDD06100	Die M6 × 1,0
TDD08125	Die M8 × 1,25
TDD10150	Die M10 × 1,5
TDD12175	Die M12 × 1,75
TDT03050	Tap M3 × 0,5
TDT04070	Tap M4 × 0,7
TDT05080	Tap M5 × 0,8
TDT06100	Tap M6 × 1,0
TDT08125	Tap M8 × 1,25
TDT10150	Tap M10 × 1,5
TDT12175	Tap M12 × 1,75

TTTX23 1/2" TX Bit Socket Set TT1 23 Pieces

220720	TX Bits 40 mm TX20
220725	TX Bits 40 mm TX25
220727	TX Bits 40 mm TX27
220730	TX Bits 40 mm TX30
220740	TX Bits 40 mm TX40
220745	TX Bits 40 mm TX45
220750	TX Bits 40 mm TX50
220755	TX Bits 40 mm TX55
220760	TX Bits 40 mm TX60
220770	TX Bits 40 mm TX70
220820	TX Bits 75 mm TX20 mm
220825	TX Bits 75 mm TX25 mm
220827	TX Bits 75 mm TX27 mm

220830 TX Bits 75 mm TX30 mm

220840 TX Bits 75 mm TX40 mm

220845 TX Bits 75 mm TX45 mm

220850 TX Bits 75 mm TX50 mm

220855 TX Bits 75 mm TX55 mm

220860 TX Bits 75 mm TX60 mm

220870 TX Bits 75 mm TX70 mm

M120061-C 1/2" Bit Adaptor 10 mm

M120062-C 1/2" Bit Adaptor 12 mm

MDM711 Hex Mini Screwdriver 2

TTTX30 3/8" TX Bit Socket Set TT1 30 Pieces

M140704-C 1/4" TX-E Socket E4

M140705-C 1/4" TX-E Socket E5

M140706-C 1/4" TX-E Socket E6

M140707-C 1/4" TX-E Socket E7

M140708-C 1/4" TX-E Socket E8

M380020-C 3/8" Extension Bar 75 mm

M380035-C Reducing Adaptor 3/8"F - 1/4"M

M380710-C 3/8" TX-E Socket E10

M380712-C 3/8" TX-E Socket E12

M380714-C 3/8" TX-E Socket E14

M380716-C 3/8" TX-E Socket E16

M380718-C 3/8" TX-E Socket E18

M381210-C 3/8" TPX Bit Socket TPX10

M381210T-C 3/8" TX Bit Socket TX10

M381215-C 3/8" TPX Bit Socket TPX15

M381215T-C 3/8" TX Bit Socket TX15

M381220-C 3/8" TPX Bit Socket TPX20

M381220T-C 3/8" TX Bit Socket TX20

M381225-C 3/8" TPX Bit Socket TPX25

M381225T-C 3/8" TX Bit Socket TX25

M381227-C 3/8" TPX Bit Socket TPX27

M381227T-C 3/8" TX Bit Socket TX27

M381230-C 3/8" TPX Bit Socket TPX30

M381230T-C 3/8" TX Bit Socket TX30

M381240-C 3/8" TPX Bit Socket TPX40

M381240T-C 3/8" TX Bit Socket TX40

M381245-C 3/8" TPX Bit Socket TPX45

M381245T-C 3/8" TX Bit Socket TX45

M381250-C 3/8" TPX Bit Socket TPX50

M381250T-C 3/8" TX Bit Socket TX50

TTTX7 T-Handle TX/TPX Key Set TT1 7 Pieces

520010 T Handle Ball Point TX Key TX10

520015 T Handle Ball Point TX Key TX15

520020 T Handle Ball Point TX Key TX20

520025 T Handle Ball Point TX Key TX25

520027 T Handle Ball Point TX Key TX27

520030 T Handle Ball Point TX Key TX30

520040 T Handle Ball Point TX Key TX40

TTVG05 Power Grip Plier Set TT1 5 Pieces

401-10 Curved Jaw Power Grip Plier 235 mm

401-4 Curved Jaw Power Grip Plier 105 mm

401-7 Curved Jaw Power Grip Plier 190 mm

404-4 Long Nose Power Grip Plier 125 mm

404-6 Long Nose Power Grip Plier 170 mm

TTX2032 Combination Spanner Set TTX4 7 Pieces

600520 Combination Spanner Metric 20 mm

600521 Combination Spanner Metric 21 mm

600522 Combination Spanner Metric 22 mm

600524 Combination Spanner Metric 24 mm

600527 Combination Spanner Metric 27 mm

600530 Combination Spanner Metric 30 mm

600532 Combination Spanner Metric 32 mm

TTX2493 1/2" Torque Wrench & Breaker Bar Set TTX4

1201 1/2" Breaker Bar 450 mm DIN3122

1292AG-EP 1/2" Torque Wrench 40 - 210Nm

TTX2640 Combination Spanner Set AF TTX4 7 Pieces

600126 Combination Spanner AF 13/16"

600128 Combination Spanner AF 7/8"

600130 Combination Spanner AF 15/16"

600132 Combination Spanner AF 1"

600134 Combination Spanner AF 1-1/16"

600136 Combination Spanner AF 1-1/8"

600140 Combination Spanner AF 1-1/4"

TTX6311 Double Ring Spanner Set TTX4 11 Pieces

630607 Double Ring Spanner Metric 6 × 7 mm

630809 Double Ring Spanner Metric 8 × 9 mm

631011 Double Ring Spanner Metric 10 × 11 mm

631213 Double Ring Spanner Metric 12 × 13 mm

631415 Double Ring Spanner Metric 14 × 15 mm

631617 Double Ring Spanner Metric 16 × 17 mm

631819 Double Ring Spanner Metric 18 × 19 mm

632022 Double Ring Spanner Metric 20 × 22 mm

632123 Double Ring Spanner Metric 21 × 23 mm

632427 Double Ring Spanner Metric 24 × 27 mm

633032 Double Ring Spanner Metric 30 × 32 mm

TTX918N Screwdriver Set Flat & PH TTX4 8 Pieces

MD920N1 Flat Screwdriver 0.5 × 3.0 × 100 mm S

MD923N Flat Screwdriver 1.0 × 5.5 × 150 mm M

MD928N Flat Screwdriver 1.2 × 6.5 × 38 mm XS

MD932N1 Flat Screwdriver 1.2 × 6.5 × 150 mm L Hex Shaft

MD934N Flat Screwdriver 1.2 × 8.0 × 150 mm XL Hex Shaft

MD935N Flat Screwdriver 1.6 × 10.0 × 200 mm XL Hex Shaft

MD948N PH Screwdriver PH2 × 38 mm XS

MD953N PH Screwdriver PH3 × 150 mm XL Hex Shaft

TTXEXT13 Extension Bars Set TTX4 13 Pieces

M120020W-C 1/2" Wobble Extension Bar 75 mm

M120024-C 1/2" Extension Bar 500 mm

M120030-C 1/2" Universal Joint

M140022-C 1/4" Extension Bar 150 mm

M140024-C 1/4" Extension Bar 305 mm

M140030-C 1/4" Universal Joint

M380020W-C 3/8" Wobble Extension Bar 75 mm

M380024-C 3/8" Extension Bar 500 mm

M380030-C 3/8" Universal Joint

M380035-C Reducing Adaptor 3/8"F - 1/4"M

MDM711 Hex Mini Screwdriver 2

MDM712 Hex Mini Screwdriver 2.5

T-HD T Bar Handle Grip

TTXPB3 Pry Bar Set Roll/Heel TTX4 3 Pieces

PB12 Pry Bar Roll Heel Type 300 mm

PB16 Pry Bar Roll Heel Type 400 mm

PB20 Pry Bar Roll Heel Type 500 mm