Brand of NTN corporation

# Technical data

## ESPE206

Bearing units



Grey cast housing, radial insert ball bearing with eccentric locking collar, single lip seal

## KIT CONTENT

**ES206G2, PE206**

## VISUAL (S)

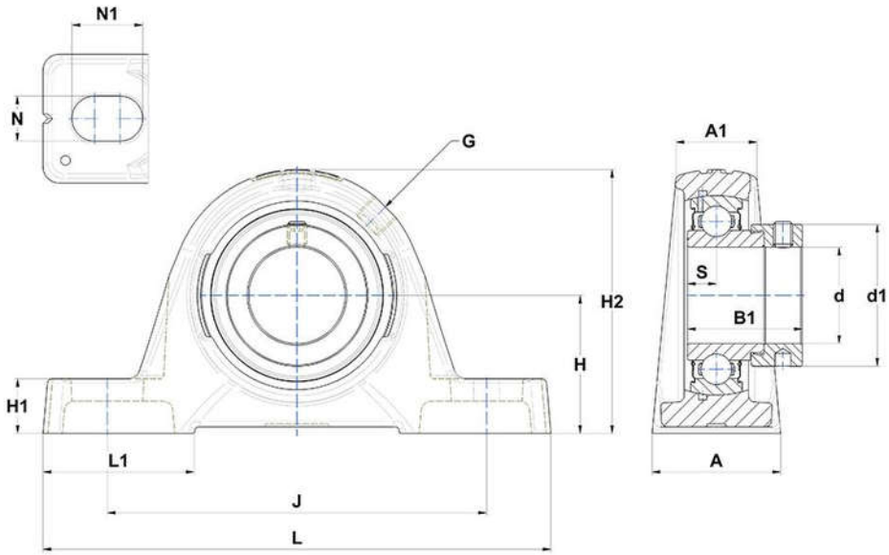


## PRODUCT DEFINITION

| | |
|---|---|
| **Brand** | SNR |
| **A - Housing width** | 40 mm |
| **A1 - Housing top width** | 25 mm |
| **B - Width of Inner Ring** | 23,8 mm |
| **d - Shaft diameter** | 30 mm |
| **d1 - Outer dia of eccent. Lock. collar / nut of adapter sleeve** | 44,1 mm |


**NTN Europe**
1 rue des Usines · BP 2017 · 74010 Annecy Cedex · France · Tel. +33 (0)4 50 65 30 00
S.A. au capital de 322 639 919 € · RCS ANNECY B 325 821 072 · Id. Fiscale : FR 48 325 821 072
SIRET 325 821 072 00015 · Code APE 2815 Z · Code NACE 28.15

| PRODUCT DEFINITION | |
|---|---|
| **G - Grease fitting** | R1/8" |
| **H - Distance mounting base to centerline spheric. seating diam.** | 42,9 mm |
| **H1 - Housing foot height** | 17 mm |
| **H2 - Housing height** | 82 mm |
| **J - Mounting holes distance** | 118 mm |
| **L - Housing length** | 158 mm |
| **L1 - Housing foot length** | 47 mm |
| **N - Mounting hole dimension** | 14 mm |
| **N1 - Mounting hole length** | 22 mm |
| **S - Distance front side/bearing centre** | 9 mm |

| PRODUCT PERFORMANCE | |
|---|---|
| **C - Dynamic load rating** | 19,5 kN |
| **C0 - Static load rating** | 11,2 kN |
| **Operating temperature min.** | -20 °C |
| **Operating temperature max.** | 100 °C |

| OTHER FEATURES | |
|---|---|
| **Mass** | 1,13 kg |
| **Recommended tightening torque for set screw** | 11.5 N-m |