GLX420400UL

FOURTH POLE ADD-ON, SIMULTANEOUS CLOSING OPERATION AS SWITCH DISCONNECTOR POLES, UL98. FOR GL0400C1UL VERSION



Contact characteristics

IEC Conventional free air thermal current Ith ≤ 40°C	A	400
Rated insulation voltage Ui IEC/EN	V	1000
Rated impulse withstand voltage Uimp	kV	12

UL technical data

UL Standard		UL98

Dimensions

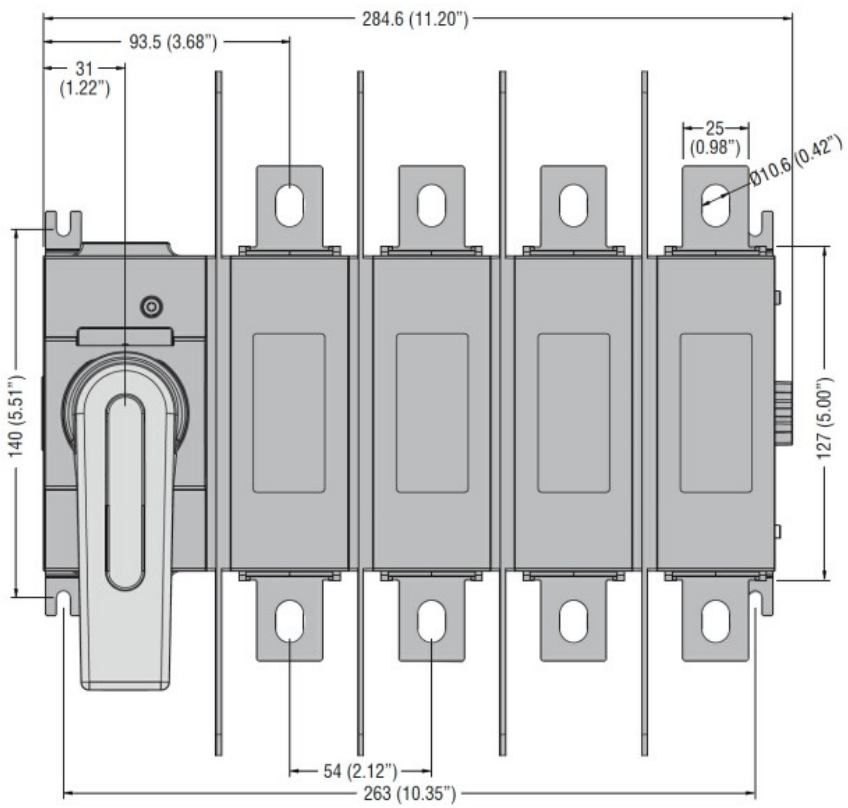

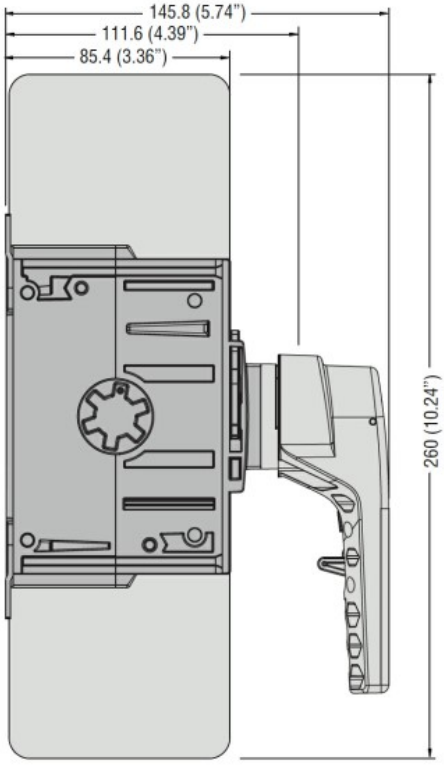

Wiring diagrams



Certifications and compliance

Compliance

The characteristics described in this document are subject to updates or modifications at any time. The descriptions, technical and functional information, illustrations and instructions in this brochure are purely illustrative, and are consequently not contractually binding

	IEC/EN 60947-1
	IEC/EN 60947-3

Certifications	
	cULus

ETIM classification

ETIM 8.0	EC002498 - Accessories/spare parts for low-voltage switch technology

The characteristics described in this document are subject to updates or modifications at any time. The descriptions, technical and functional information, illustrations and instructions in this brochure are purely illustrative, and are consequently not contractually binding