E-BOX M12, Emergency stop, signal indicator, 1 NC, Gold, Mushroom head red



fields of application

- Measurement-control-regulation
- Mechanical and system engineering
- Construction machinery
- Industrial robots
- Model construction
- Home technology

special features

- Compact dimensions: 109 x 40 x 27 mm
- Various actuator-indicator combinations from the RAFIX 22 FS+ control unit series
- With yellow upper part of housing for combinations with emergency stop actuator
- With gray upper part of housing for pushbutton combinations
- Mounting with time-saving single-hole screw mounting technology, particularly suitable for aluminum profile rails or alternatively direct mounting with M4 screws
- Connection with M12 plug: "Plug and Play

description

The E-Box M12 is a ready-to-connect, completely equipped housing including actuator and switching elements. Thus, for example, emergency stop, on/off and up/down functions, also with additional status displays, can be implemented with the very compact dimensions of the E-Box.The assembly: Screw on the clip, put on the box, connect the plug, check and ready. The E-Box M12 can be used wherever individual command device units are required at decentralized locations. Typically, for example, for emergency stop applications along a production facility or at the safety fence. The dimensions of the E-Box M12 are based on the edge dimensions of a 40 mm profile rail and the mounting concept is also designed for this.

technical data

general

Actuator position 1	Emergency stop
Actuator position 2	Leuchtvorsatz
Color of mushroom	red
Collar shape	round
Operating temperature, min.	-25 °C
Operating temperature, max.	70 °C
Storage temperature, min.	-40 °C
Storage temperature, max.	80 °C
Packaging	Box
Packaging unit	1 pcs.
net weight	124.2 g
Operating life	50,000 cycles
B10	65,000 cycles

direct links

- RAFI eCatalog

The information in this data sheet only contains general descriptions and / or performance features, which may not apply precisely as described to the respective application, and which my change due to further product enhancements. The technical data, illustrations and other information about our products are the mere results of individual technical testing. These descriptions and other product features are only binding if they expressly agreed upon at the time of the conclusion of a binding contract. In all other cases, we reserve the right to make technical changes as well as changes of availability. Pictures and other graphic illustrations are approximations only. All product names may be trademarks or brand names of the RAFI Group or any other sub-supplier of RAFI. The use of such by any third parties for their own purposes may infringe the rights of the respective entity holding those rights.

RAFI GmbH & Co. KG

Ravensburger Str. 128-134
88276 Berg / Ravensburg
Germany
www.rafi-group.com,
info.headquarters@rafi-group.com

B10d	130,000 cycles
Degree of protection, front side, according to DIN EN 60529	IP65
Degree of protection, rear side, according to DIN EN 60529	IP65
Protection class	II
MOQ order	5 pcs.
RoHS compliant	Yes
REACH compliant	Yes

mounting diameters

Outside dimension, length	123.2 mm
Outside dimension, width	40 mm
Outside dimension, height	60.2 mm

mechanical data

Contact function	1 NC
Contact material	Gold
Fixing	Assembly clip
PIN 1	LED +
PIN 2	GND
PIN 3	Normally closed contact 1
PIN 4	Normally closed contact 1

electrical data

Operating voltage of the luminous element, max.	24 V
Rated voltage, min.	5 V
Rated voltage, max.	35 V
Voltage type	AC / DC
Rated operating voltage	5-35 V
Rated current, min.	0.001 A
Rated current, max.	0.1 A
Rated power, max.	0.25 W
Power loss	0.15030 W

The information in this data sheet only contains general descriptions and / or performance features, which may not apply precisely as described to the respective application, and which my change due to further product enhancements. The technical data, illustrations and other information about our products are the mere results of individual technical testing. These descriptions and other product features are only binding if they expressly agreed upon at the time of the conclusion of a binding contract. In all other cases, we reserve the right to make technical changes as well as changes of availability. Pictures and other graphic illustrations are approximations only. All product names may be trademarks or brand names of the RAFI Group or any other sub-supplier of RAFI. The use of such by any third parties for their own purposes may infringe the rights of the respective entity holding those rights.

RAFI GmbH & Co. KG

Ravensburger Str. 128-134
88276 Berg / Ravensburg
Germany
www.rafi-group.com,
info.headquarters@rafi-group.com

drawings

Dimensioned drawing

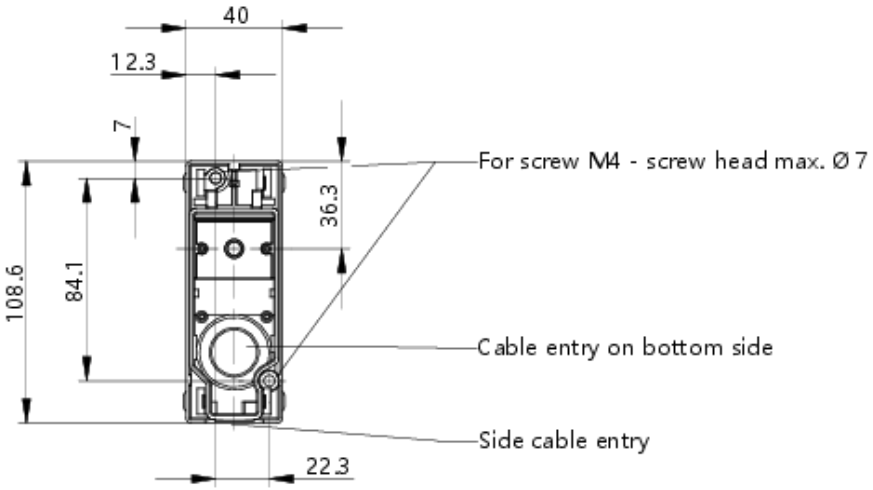

Schematic diagram

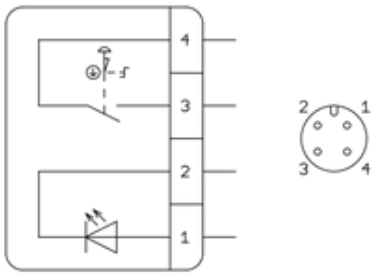

The information in this data sheet only contains general descriptions and / or performance features, which may not apply precisely as described to the respective application, and which my change due to further product enhancements. The technical data, illustrations and other information about our products are the mere results of individual technical testing. These descriptions and other product features are only binding if they expressly agreed upon at the time of the conclusion of a binding contract. In all other cases, we reserve the right to make technical changes as well as changes of availability. Pictures and other graphic illustrations are approximations only. All product names may be trademarks or brand names of the RAFI Group or any other sub-supplier of RAFI. The use of such by any third parties for their own purposes may infringe the rights of the respective entity holding those rights.

RAFI GmbH & Co. KG

Ravensburger Str. 128-134
88276 Berg / Ravensburg
Germany
www.rafi-group.com,
info.headquarters@rafi-group.com