Sensor mounting, Series CB1

1827020082

General series information
AVENTICS Sensor mountings

- AVENTICS Sensors mountings are especially designed to mount AVENTICS sensors on various cylinders.

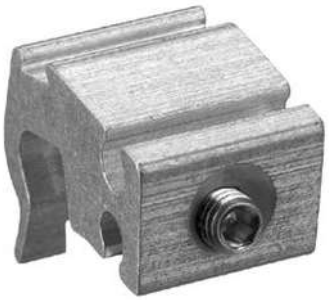

Technical data

Industry	Industrial
For series	TRB TRR
Cylinders Ø min.	50 mm
Cylinders Ø max.	63 mm
Weight	0.013 kg

Material

Housing material	Aluminum
Part No.	1827020082

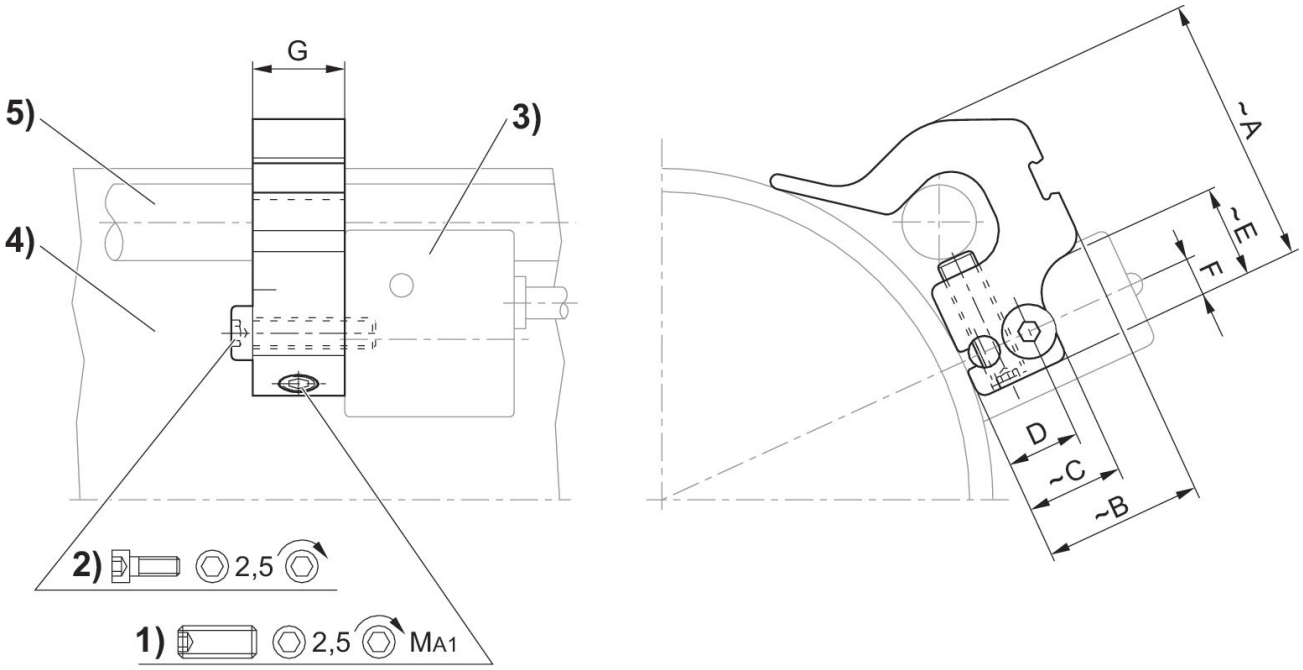

1) Clamping threaded pin 2) Mounting screw for sensor 3) Sensor 4) Cylinder profile 5) Tie rod

Part No.	Cylinders Ø mm	A	B	C	D	E	F	G	Clamping threaded pin
1827020081	32 - 40 mm	25.3	12.5	12.5	9.5	–	5	16	M5x16
1827020082	50 - 63 mm	28.7	15.6	12.5	9.5	12	5	12	M5x16
1827020083	80 - 100 mm	33.8	23	12.5	9.5	12	5	12	M5x16

Part No.	MA1 [Nm]
1827020081	1 +0,3
1827020082	1 +0,3
1827020083	1 +0,3