SBG434

Flow transmitter with integrated backflow prevention

SBG12HF010KG/US

Please note the changed housing design!

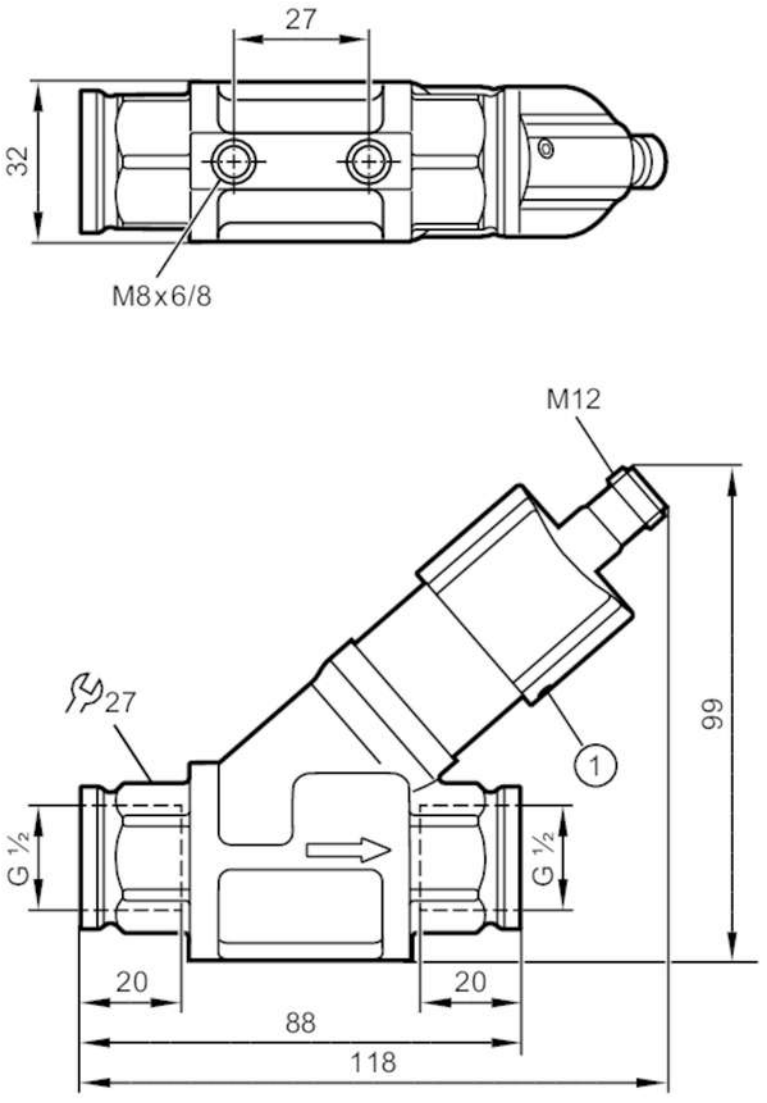

1 socket head screw

Product characteristics			
Measuring range	[l/min]	2...50	
Process connection		threaded connection G 1/2 internal thread DN15	
Application			
Media		Liquids; water; glycol solutions; coolants	
Medium temperature	[°C]	-10...100	
Pressure rating		40 bar	4 MPa
Electrical data			
Operating voltage	[V]	18...32 DC; (to SELV/PELV)	
Current consumption	[mA]	< 35	
Protection class		III	
Reverse polarity protection		yes	

SBG434

Flow transmitter with integrated backflow prevention

SBG12HF010KG/US

Outputs			
Output signal		analogue signal	
Analogue current output	[mA]	4...20	
Max. load	[Ω]	500	
Short-circuit protection		yes	
Overload protection		yes	
Measuring/setting range			
Measuring range	[l/min]	2...50	
Accuracy / deviations			
Repeatability [% of the final value]		1	
Measuring error [% of the final value]		± 5	
Response times			
Response time	[s]	< 0.01	
Operating conditions			
Ambient temperature	[°C]	0...60	
Storage temperature	[°C]	-15...80	
Protection		IP 65; IP 67	
Tests / approvals			
EMC		DIN EN 61000-6-2	
		DIN EN 61000-6-3	
Shock resistance		DIN EN 60068-2-27	20 g (11 ms)
Vibration resistance		DIN EN 60068-2-6	5 g (10...2000 Hz)
MTTF	[years]	778	
Mechanical data			
Weight	[g]	544	
Materials		brass chemically nickel-plated; PP; stainless steel (316L/1.4404); aluminium anodised; PA	
Materials (wetted parts)		stainless steel (316 / 1.4401); brass; brass chemically nickel-plated; PP; PPS; O-ring: FKM	
Process connection		threaded connection G 1/2 internal thread DN15	
Switching cycles mechanical		10 million	
Remarks			
Remarks		Recommendation Use 200 micron filtration	
		All data refer to water (20 °C).	
Notes		Please note the changed housing design!	
Pack quantity		1 pcs.	

SBG434

Flow transmitter with integrated backflow prevention

SBG12HF010KG/US

Electrical connection

Connector: 1 x M12; coding: A

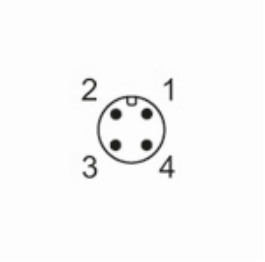

Connection

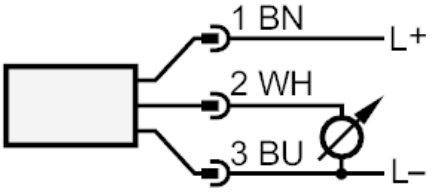

	colours to DIN EN 60947-5-2
	Core colours :
BN =	brown
BU =	blue
WH =	white

SBG434

Flow transmitter with integrated backflow prevention

SBG12HF010KG/US

Diagrams and graphs

Pressure loss

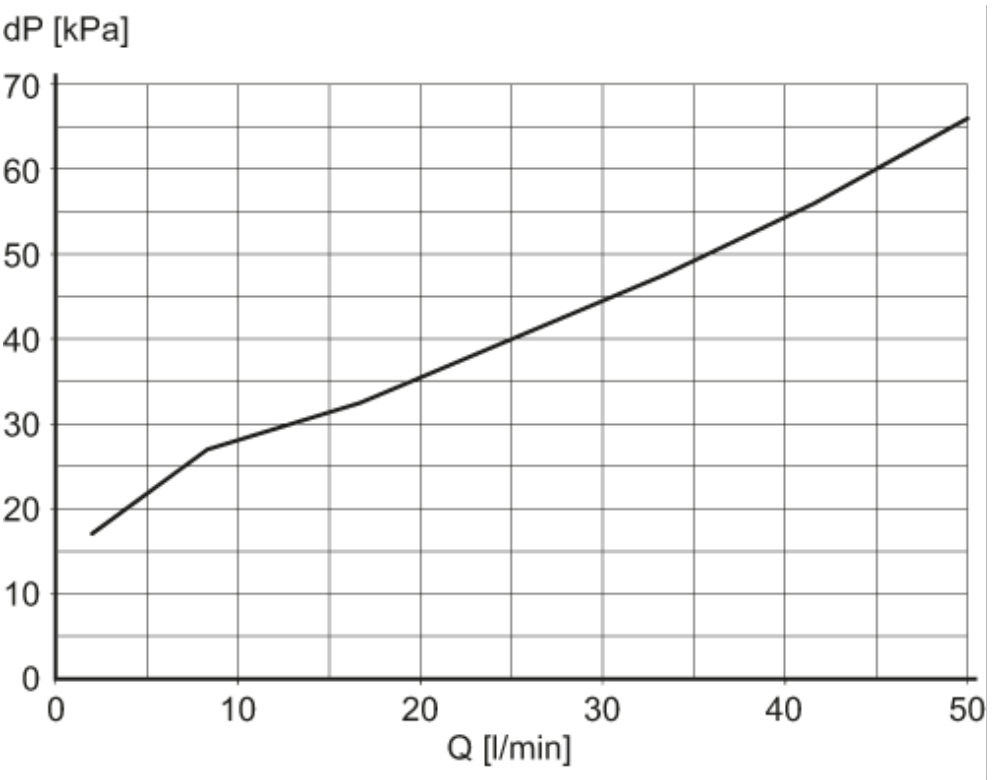

dP Pressure loss

Q volumetric flow quantity