79036200	DATA SHEET	
Valid from: 17.09.2018	EPIC® H-B 10 SGRLH	

Description

- The smallest housing with single and double lever.
- The right housing is available for every application.



General Characteristics

Series	H-B 10
Version	Surface mount base M25 / M32 (Article 79036400)
Locking	Double lever
Cable entry	2
Protection (DIN EN 60529)	IP 65 (latched)
Protection (NEMA 250, UL50E)	4, 12 (latched)
Temperature Range	-40°C to +100°C, short term up to +125°C

Materials and Surfaces

Housing	Aluminium alloy, powder-coated, grey
Bolt	Heat-treatable steel, zinc-plated
Lever	Steel, zinc-plated
Profile Seal	NBR

Approvals

VDE-Approval, VDE-REG.-Nr.	B437

Standard

Safety Standard	IEC 61984

We reserve all rights according to DIN ISO 16016.

Technical Drawings



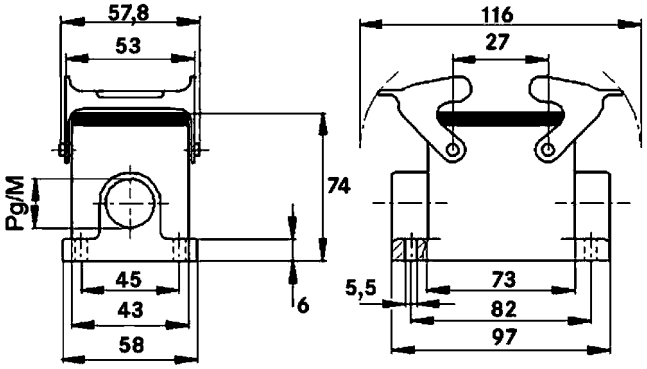

Automation

Industrial machinery and plant engineering

Mechanical resistance

Robust

Waterproof

Info

Universal, robust metal housings size H-B 10

Application range

Plant engineering
Light & sound technology
Plastics industry

Remark

Photographs are not to scale and do not represent detailed images of the respective products.

We reserve all rights according to DIN ISO 16016.