Inductive Sensors

BES M18MF-GSC70B-S04G
Order Code: BES0328

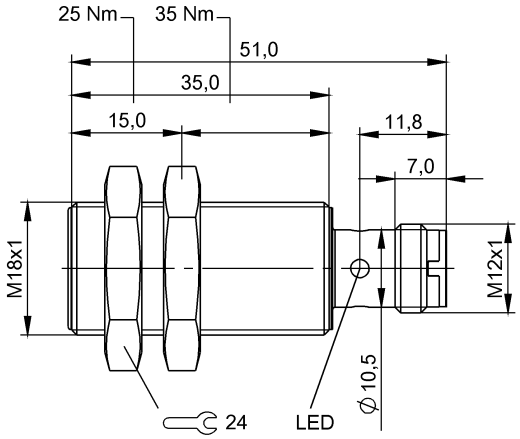

Basic features

Approval/Conformity	CE cULus EAC WEEE
Basic standard	IEC 60947-5-2
Trademark	Global

Display/Operation

Function indicator	yes
Power indicator	no

Electrical connection

Connection	M12x1-Male, 4-pin, A-coded
Polarity reversal protected	yes
Protection against device mix-ups	yes
Short-circuit protection	yes

Electrical data

Load capacitance max. at Ue	1 µF
Min. operating current Im	5 mA
Operating voltage Ub	10...36 VDC
Rated insulation voltage Ui	75 V DC
Rated operating current Ie	100 mA
Rated operating voltage Ue DC	24 V
Rated short circuit current	100 A
Ready delay tv max.	50 ms
Residual current Ir max.	600 µA
Ripple max. (% of Ue)	15 %
Switching frequency	600 Hz
Utilization category	DC -13
Voltage drop static max.	4.2 V

Environmental conditions

Ambient temperature	-25...70 °C
Contamination scale	3
EN 60068-2-27, Shock	Half-sinus, 30 g_n, 11 ms
EN 60068-2-6, Vibration	55 Hz, amplitude 1 mm, 3x30 min
IP rating	IP67

Interface

Switching output	polarized normally open (NO)

Material

Housing material	Brass, Nickel-free coated
Material sensing surface	PA 12

Inductive Sensors

BES M18MF-GSC70B-S04G
Order Code: BES0328

Mechanical data

Dimension	Ø 18 x 51 mm
Installation	for flush mounting
Size	M18x1
Tightening torque	25 Nm

Range/Distance

Assured operating distance Sa	5.6 mm
Hysteresis H max. (% of Sr)	20.0 %
Rated operating distance Sn	7 mm
Real switching distance sr	7 mm
Repeat accuracy max. (% of Sr)	5.0 %
Switching distance marking	■■
Temperature drift max. (% of Sr)	10 %
Tolerance Sr	±10 %

Remarks

The sensor is functional again after the overload has been eliminated.
Specify maximum attainable switching frequency (not per IEC 60947-5-2)
Flush: See installation instructions for inductive sensors with extended range 825357.

Connector Drawings



Wiring Diagrams

